WARWICK®

有用的夹具 有效的装夹

Useful fixture for effective clamping

简单　便宜　可靠

SIMPLE · AFFORDABLE · STABLE

虎钳 - 夹具 - 零点快换系统

VISES - FIXTURES - QUICK CHANGE SYSTEMS

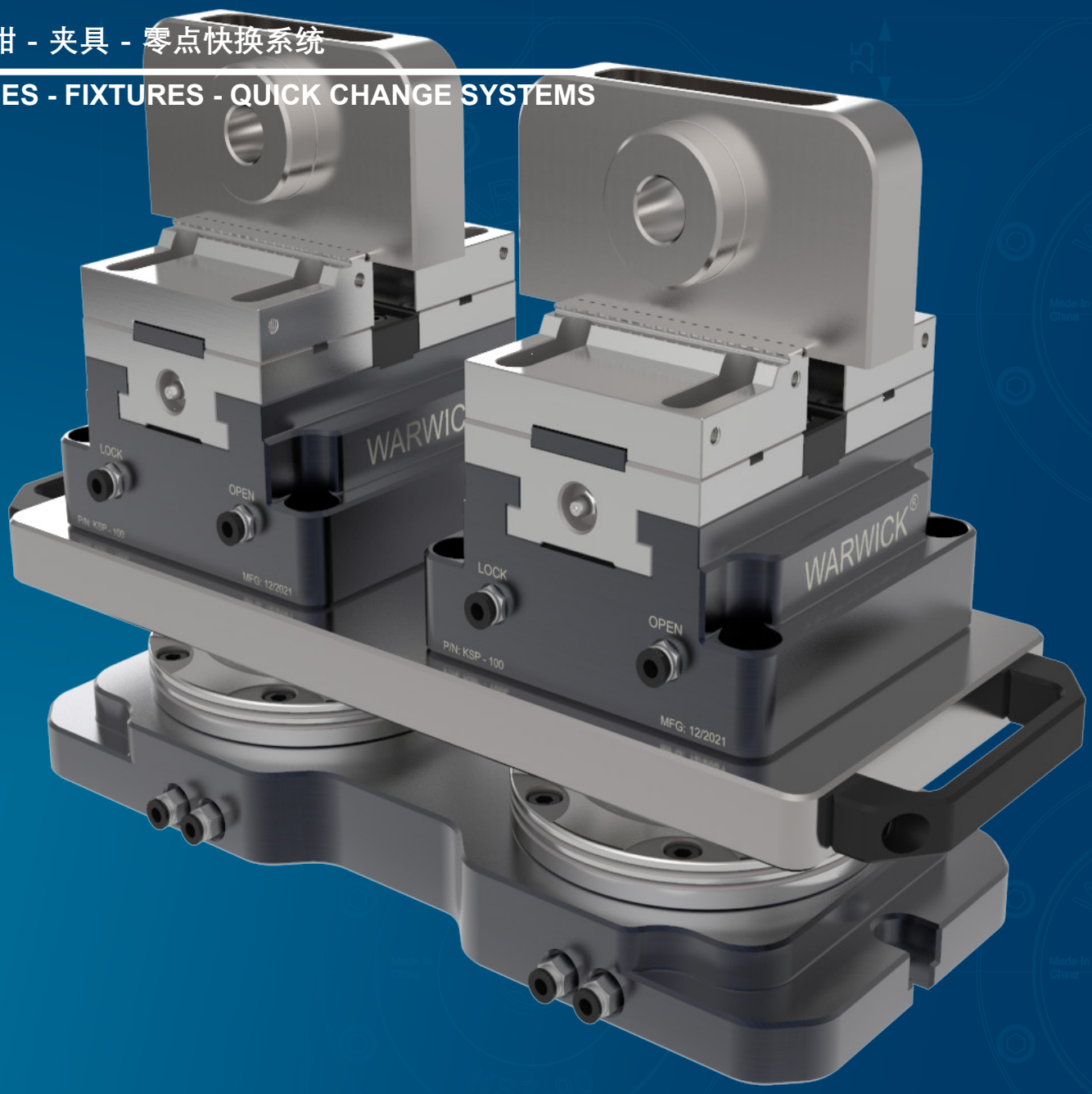

虎钳 - 夹具 - 零点快换系统

VISES - FIXTURES - QUICK CHANGE SYSTEMS

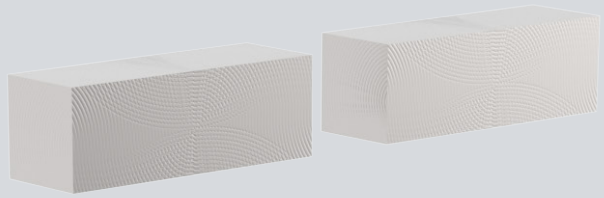

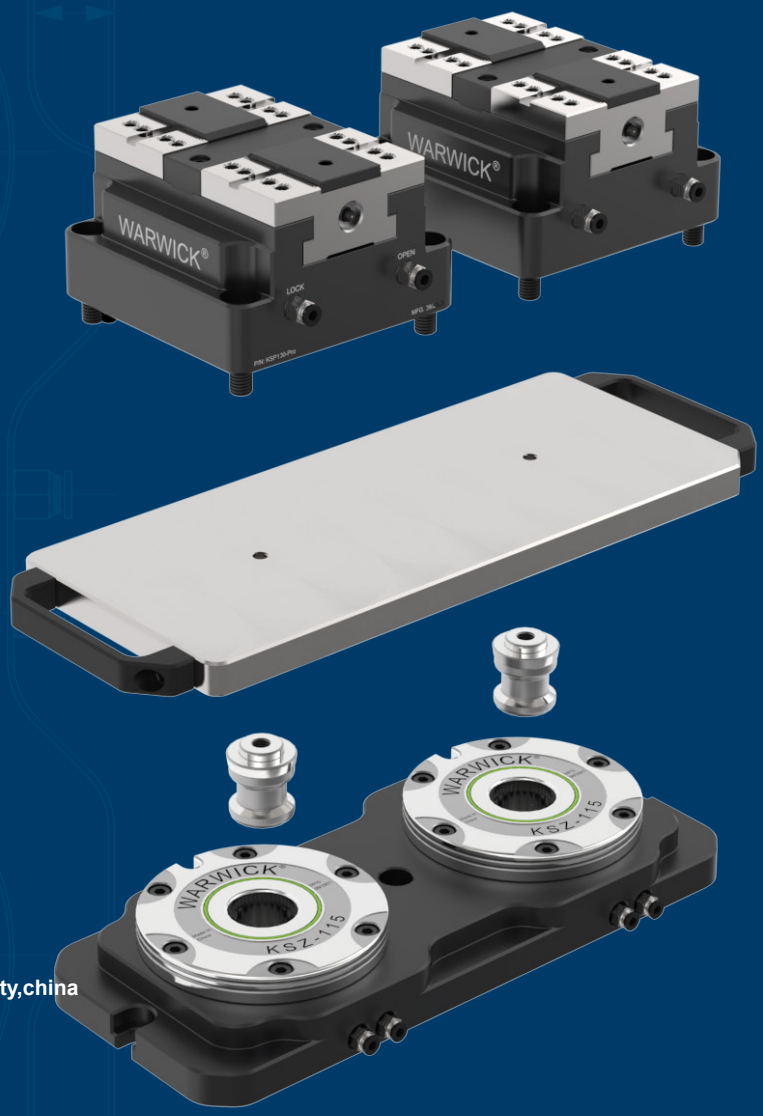

WARWICK® 东莞市沃维克精密工具有限公司
Dongguan Warwick Precision Tools Co., Ltd

地址（Add）：广东省东莞市长安镇河东三路 32 号
No.32 hedong 3rd road,jinxia ,chang'an town,dongguan city,china
电话（Tel）：+86-769-81501831 +86-18046949986
网址（Web）：www.warwicktools.com
邮箱（E-mail）：info@warwicktools.com

公司简介
Company Profile

WARWICK 成立于 2015 年，是一家专业从事夹具设计、研发和生产的专业公司。我们的使命是提供经济高效、易于使用且可靠的夹具，帮助客户节省夹紧时间并提高生产效率。

凭借经验丰富的研发团队、先进的生产设备和以客户为导向的方法，我们确保高质量的产品和及时的交货。我们专注于功能、性能和用户体验，不断优化我们的产品以满足不同的市场需求。

WARWICK, established in 2015, is a professional company specializing in the design, research development and production of workholdings for CNC Machine. Our mission is to provide cost-effective, easy-to-use, and reliable fixtures that help clients save clamping time and improve production efficiency.

With an experienced R&D team, advanced production equipment, and a customer-oriented approach, we ensure high-quality products and timely deliveries. We focus on functionality, performance, and user experience, continually optimizing our offerings to meet diverse market needs.

我们的使命

精益求精，追求产品优越性，提供贴心服务，满足客户需求。

诚信共赢

诚信经营，绝不欺骗客户，绝不伪造产品数据

Our Mission

Striving for excellence, pursuing product superiority, and providing attentive service to meet customer needs.

Honesty and Win Win

Operate with integrity, never deceive customers, and never falsify product data

设计 / Design

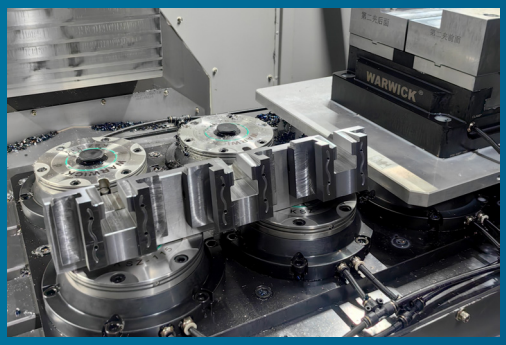

制造 / Manufacturing

检测 / Measuring

应用在 3/4/5 轴加工中心

标准化的模块化系统为 3 / 4 / 5 轴加工中心提供了最大的灵活性。针对小批量和高精度产品差异，使用 KSZ 零点定位系统 在几分钟内快速高效地完成转换。
另一个优势：即使是大批量的工件，也可以使用标准解决方案，经济地夹紧在加工区域内。

Used on 3/4/5-axis machining centers

The standardized, modular system offers maximum flexibility for 3/4/5-axis machining centers. For small batches and high-precision product variances, changeovers can be made quickly and efficiently in a matter of minutes with the KSZ zero positioning system.
Another advantage: Even large quantities of workpieces can be clamped economically in the machining area using standard solutions.

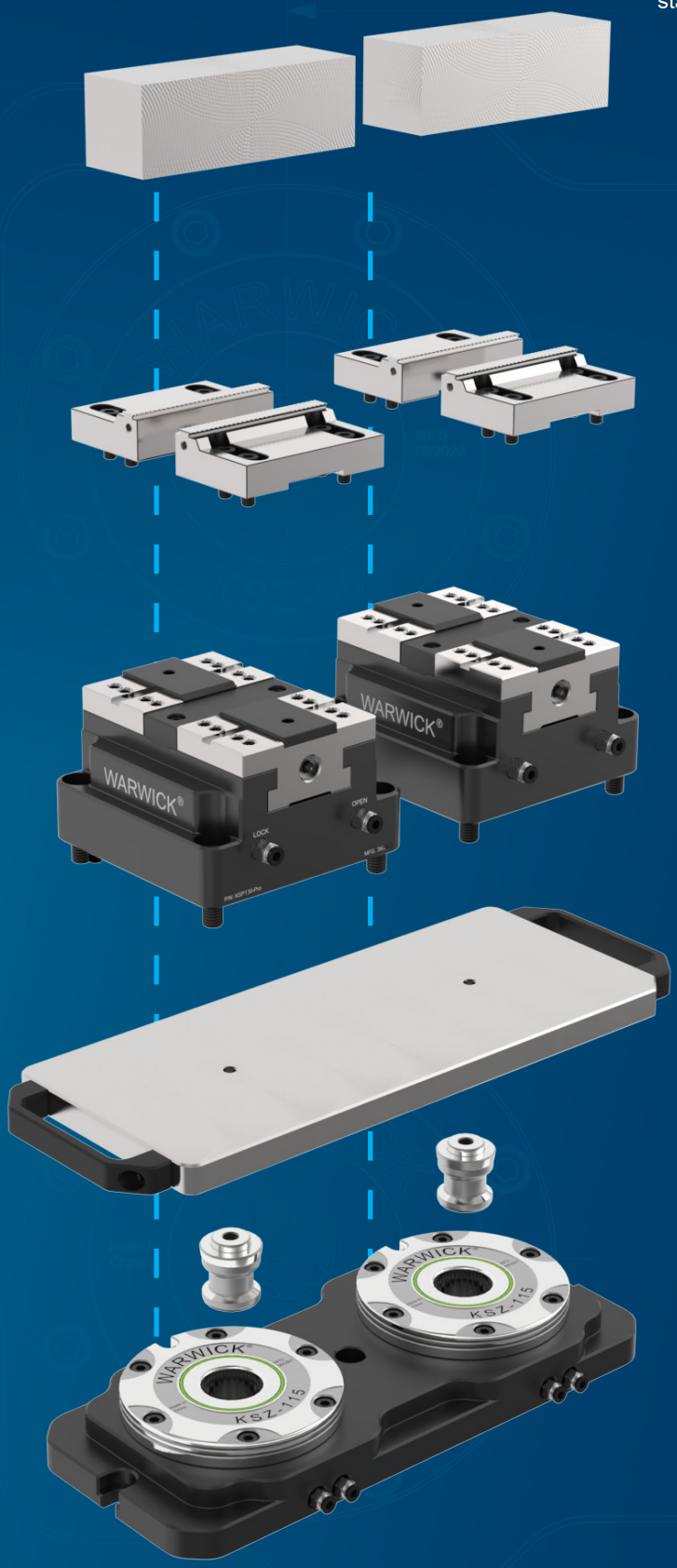

夹爪
Clamping jaws

夹紧装置
Clamping devices

夹具托盘
Clamping pallet

定位拉钉
Clamping pins

夹紧站
Clamping station

应用在 3 轴加工中心

Used on 3-axis machining centers

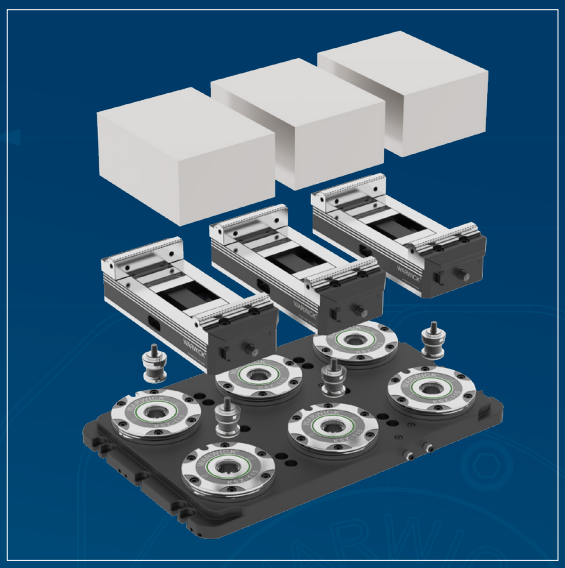

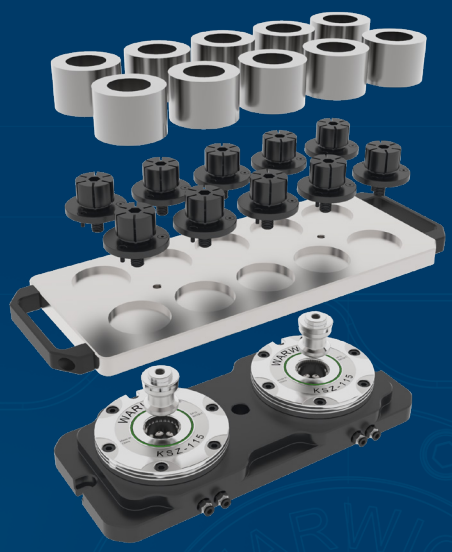

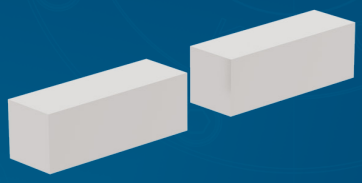

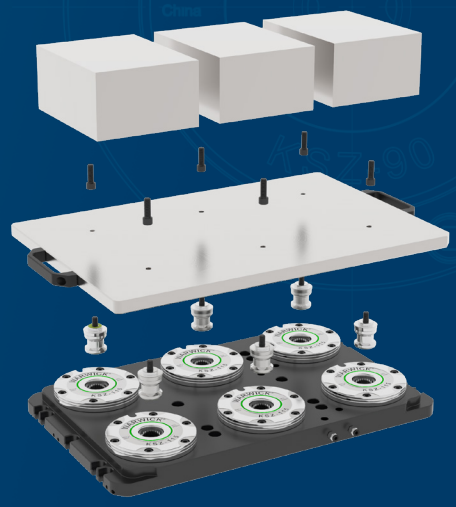

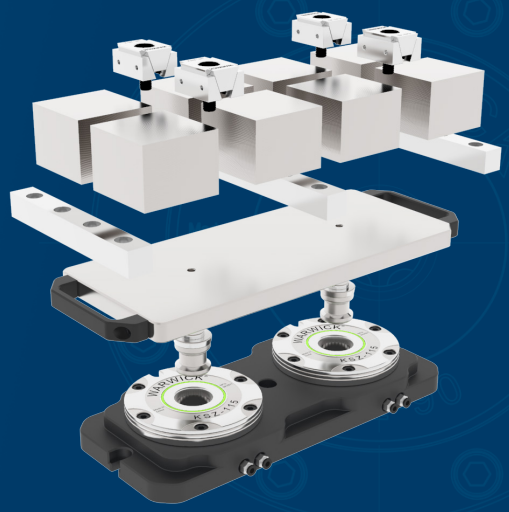

应用在 4 / 5 轴加工中心

Used on 4-axis or 5-axis machining centers

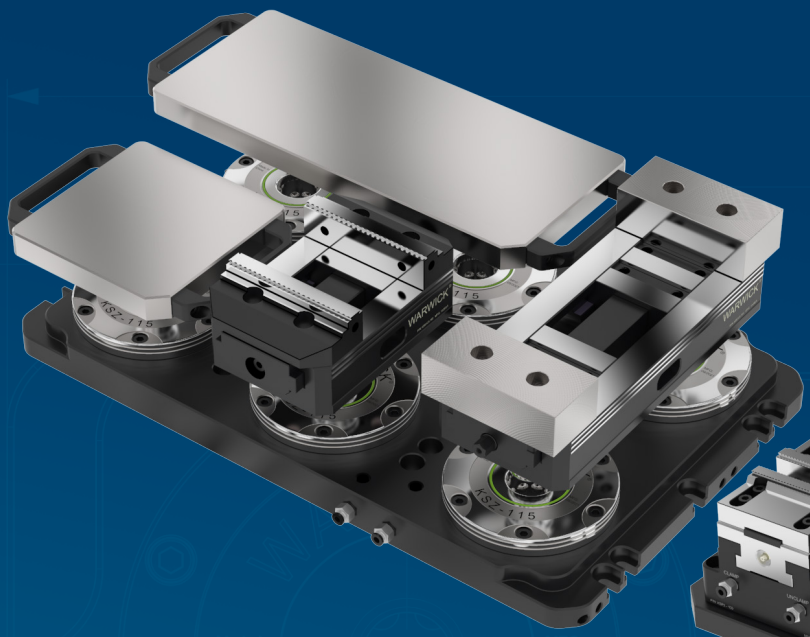

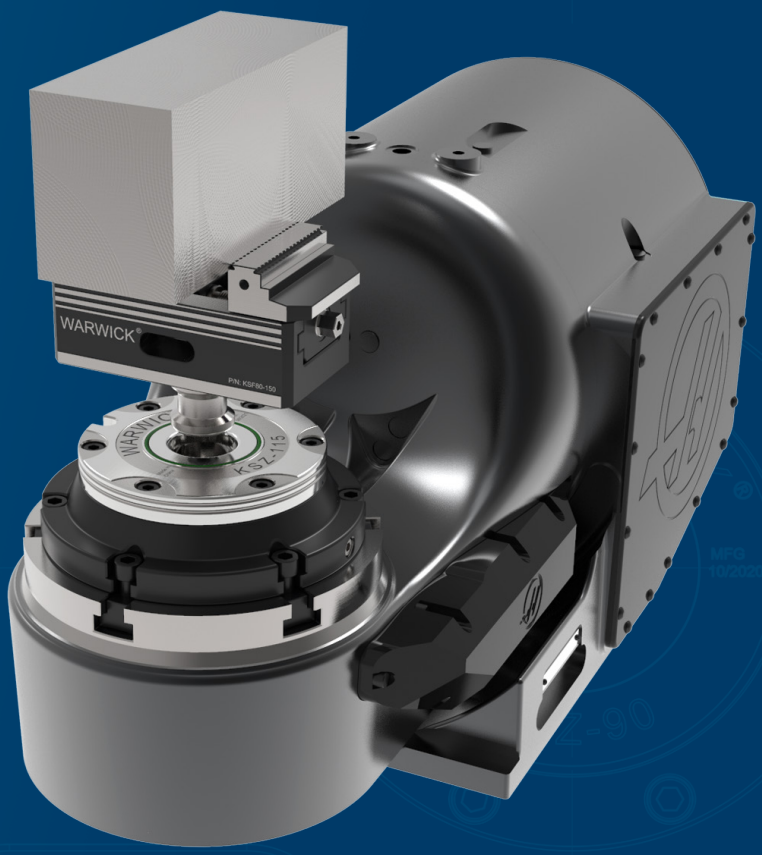

应用于加工中心

Applied to CNC

模块化夹持系统

利用可单独使用的模块化装夹系统进行组合，提升装夹精度和装夹效率。
. 500 多种工件夹持组合
. 装夹时间最高可降低 90%

Modular clamping system

Combined with a modular clamping system that can be used separately, it improves clamping accuracy and clamping efficiency.
. More than 500 workholding combinations
. Up to 90% reduction in clamping time

气动自定心虎钳 | Pneumatic self-centering vise

B1-B12

手动自定心虎钳 | Manual self-centering vise

C1-C30

零点定位系统 | Zero point positioning system

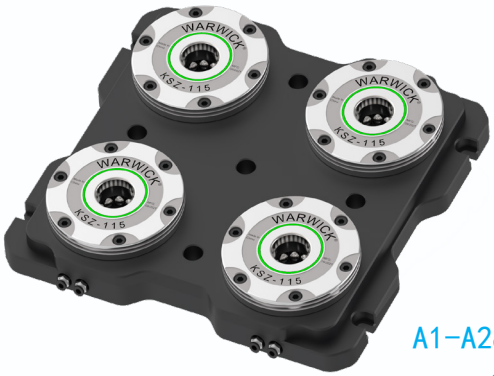

A1-A28

并列式多工位虎钳 | Parallel multi-station vise

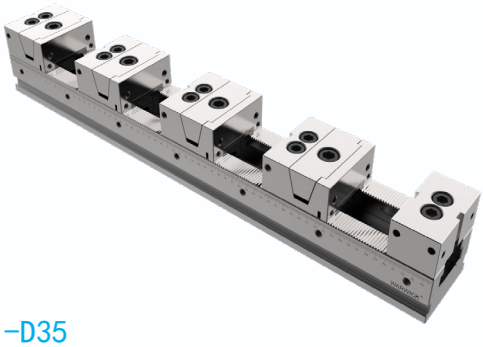

D1-D35

精巧型夹具 | Compact fixture

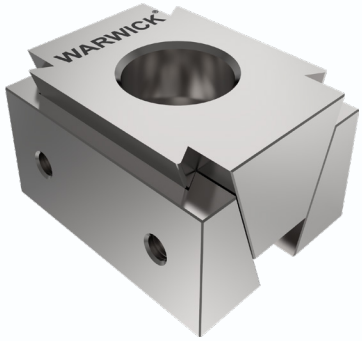

E1-E4

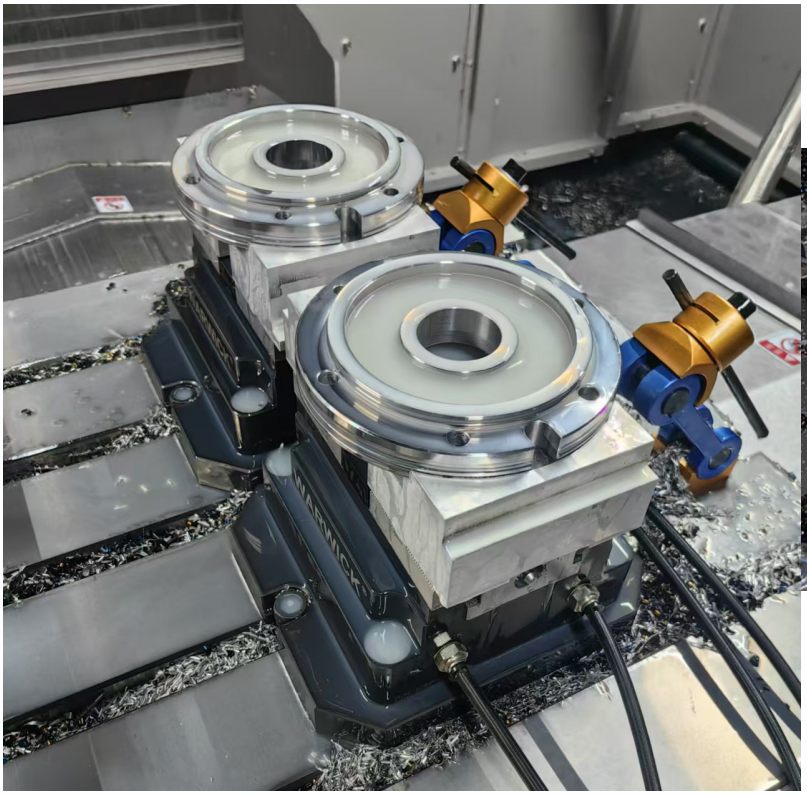
WARWICK


WARWICK
WARWICK

点击图片了解更多 | Click on the image to learn more

KSZ 零点定位系统 | KSZ Zero point positioning system
KSZ-88



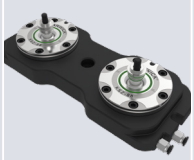
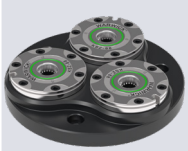

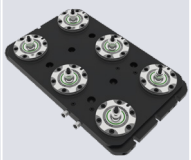

型号 Model	KSZ-88	KSZ88-T1	KSZ88-T2	KSZ88-R3	KSZ88-T3	KSZ88-T6
驱动方式 Drive mode						
气动 Drive mode	●	●	●	●	●	●
手动 Manual						
产品描述 Product description						
外形尺寸 Form factor	Φ88*34	Φ118*40	283*110*40	Φ280*42	433*111*40	433*261*40
夹紧力 Clamping force	6.5 KN	6.5 KN	6.5 KN	6.5 KN	6.5 KN	6.5 KN
中心距离 Center distance			150 mm	Φ110 mm	150 mm	150 mm
驱动压力 / 扭矩 Drive pressure/torque	6.5 bar	6.5 bar	6.5 bar	6.5 bar	6.5 bar	6.5 bar
应用特点						
共同特点 Common features	. 一次操作完成定位、固定和夹紧 . 几秒内更换工件和夹具 . 工件直接夹持 . 不锈钢版本 . 适用小型机床和轻型切削 . 可应用 WARWICK 所有的夹紧模块 . 使用 DCPA-23/DCPB-23/DCPC-23 拉钉 . 盘面直径 Φ88			. Positioning, fixing and clamping in one operation . Change workpieces and fixtures in seconds . The workpiece is clamped directly . Stainless steel material . Suitable for small machines and light cutting . All WARWICK clamping modules can be used . DCPA-23/DCPB-23/DCPC-23 dowel pins are used . The diameter of the disk is Φ88		
差异特点 Differential characteristics	. 需要底盘 . A base connection is required	. 无需底盘 . 单头夹紧站 . No base required . Single head clamping station	. 无需底盘 . 双头夹紧站 . No base required . Double-ended clamping station			

点击图片了解更多 | Click on the image to learn more

KSZ 零点定位系统 | KSZ Zero point positioning system
KSZ-90

						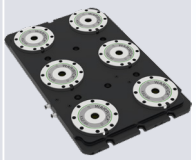
型号 Model	KSZ-90	KSZ90-T1	KSZ90-T2	KSZ90-T3	KSZ90-T4	KSZ90-T6
驱动方式 Drive mode						
气动 Drive mode	●	●	●	●	●	●
手动 Manual						
产品描述 Product description						
外形尺寸 Form factor	Φ130*37.5	Φ162*39	380*158*40	580*158*40	368*368*40	580*358*40
夹紧力 Clamping force	14 KN	14 KN	14 KN	14 KN	14 KN	14 KN
中心距离 Center distance			200 mm	200 mm	200 mm	200 mm
驱动压力 / 扭矩 Drive pressure/torque	6.5 bar	6.5 bar	6.5 bar	6.5 bar	6.5 bar	6.5 bar
应用特点						
共同特点 Common features	. 一次操作完成定位、固定和夹紧 . 几秒内更换工件和夹具 . 工件直接夹持 . 不锈钢版本 . 适用常规型机床和中型切削 . 可应用 WARWICK 所有的夹紧模块 . 使用 DCPA-23/DCPB-23/DCPC-23 拉钉 . 盘面直径 Φ130			. Positioning, fixing and clamping in one operation . Change workpieces and fixtures in seconds . The workpiece is clamped directly . Stainless steel version . Suitable for conventional machines and medium cutting . All WARWICK clamping modules can be used . DCPA-23/DCPB-23/DCPC-23 pull pegs are used . The diameter of the disk is Φ130		
差异特点 Differential characteristics	. 需要底盘 . A base connection is required	. 无需底盘 . 单头夹紧站 . No base required . Single head clamping station	. 无需底盘 . 双头夹紧站 . No base required . Double-head clamping station	. 无需底盘 . 三头夹紧站 . No base required . Three-head clamping station	. 无需底盘 . 四头夹紧站 . No base required . Four-head clamping station	. 无需底盘 . 六头夹紧站 . No base required . Six-head clamping station

点击图片了解更多 | Click on the image to learn more

	DCP-23 零点定位系统 | **DCP-23** Zero point positioning system DCP-23		
			
型号 Model	DCPA-23	DCPB-23	DCPC-23
驱动方式 Drive mode			
气动 Drive mode			
手动 Manual	●	●	●
产品描述 Product description			
外形尺寸 Form factor	Φ23*34	Φ23*34	Φ23*34
夹紧力 Clamping force	适配零点定位 KSZ-88/KSZ90 Suitable for zero positioning KSZ-88/KSZ90		
驱动压力 / 扭矩 Drive pressure/torque	25 N.m	25 N.m	25 N.m
应用特点			
共同特点 Common features	. 一次操作完成定位、固定和夹紧 . 几秒内更换工件和夹具 . 工件直接夹持 . 不锈钢版本 . 适用常规型机床和中型切削 . 可应用 WARWICK 所有的夹紧模块 . Positioning, fixing and clamping in one operation . Change workpieces and fixtures in seconds . The workpiece is clamped directly . Stainless steel version . Suitable for conventional machines and medium cutting . All WARWICK clamping modules can be used		
差异特点 Differential characteristics	. 定位拉丁 – 确定定位原点并锁紧 . 适用于单头夹紧站及以上使用 . 一个工装只能使用一个 . 可以单独使用 . Positioning clamp pin-determine the positioning origin and lock it .Suitable for single head workstation and above .Can use 1pcs only in a setup. .Can use alone	. 定向拉丁 – 辅助定位并锁紧 . 适用于双头夹紧站及以上使用 . 一个工装只能使用一个 . 需配合 DCPA 使用 . 拉钉只能使用一个 . Directional clamp pin-Assist in positioning and lock it . Suitable for double-head workstation and above . Can use 1pcs only in a setup . Needs to be used in combination with DCPA	. 锁紧拉丁 – 只有锁紧功能 . 适用于三头工作站及以上使用 . 一个工装不限制使用数量 . 需配合 DCPA 和 DCPB 使用 . Locking Clamp pin-Just locking function . Suitable for three-head workstation and above . No limited to the number of uses in a setup . Needs to be used in combination with DCPA and DCPB

点击图片了解更多 | Click on the image to learn more

KSZ 零点定位系统 | Zero point positioning system
KSZ-115

		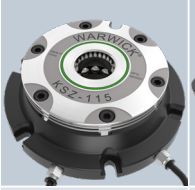		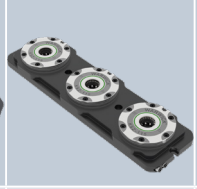	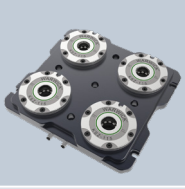	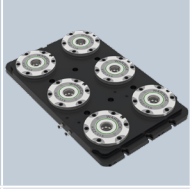
型号 Model	KSZ-115	KSZ115-T1	KSZ115-T2	KSZ115-T3	KSZ115-T4	KSZ115-T6
驱动方式 Drive mode						
气动 Drive mode	●	●	●	●	●	●
手动 Manual						
产品描述 Product description						
外形尺寸 Form factor	Φ142*46	Φ189*55	400*168*55	600*168*55	400*368*55	600*368*55
夹紧力 Clamping force	20 KN	20 KN	20 KN	20 KN	20 KN	20 KN
中心距离 Center distance			200 mm	200 mm	200 mm	200 mm
驱动压力 / 扭矩 Drive pressure/torque	6.5 bar	6.5 bar	6.5 bar	6.5 bar	6.5 bar	6.5 bar
应用特点						
共同特点 Common features	. 一次操作完成定位、固定和夹紧 . 几秒内更换工件和夹具 . 工件直接夹持 . 不锈钢版本 . 不受机床型号限制适合重型切削 . 可应用 WARWICK 所有的夹紧模块 . 使用 DCPA-40/DCPB-40/DCPC-40 拉钉 . 盘面直径 Φ143			. Positioning, fixing and clamping in one operation . Change workpieces and fixtures in seconds . The workpiece is clamped directly . Stainless steel version . Suitable for heavy cutting regardless of machine model . All WARWICK clamping modules can be used . DCPA-40/DCPB-40/DCPC-40 clamp pin are used . The diameter of the disk is Φ143		
差异特点 Differential characteristics	. 需要底盘 . A base connection is required	. 无需底盘 . 单头夹紧站 . No base required . Single head clamping station	. 无需底盘 . 双头夹紧站 . No bas required . Double-head clamping station	. 无需底盘 . 三头夹紧站 . No base required . Three-head clamping station	. 无需底盘 . 四头夹紧站 . No base required . Four-head clamping station	. 无需底盘 . 六头夹紧站 . No base required . Six-head clamping station

点击图片了解更多 | Click on the image to learn more

	DCP-40 零点定位系统 | DCP-40 Zero point positioning system DCP-40		
		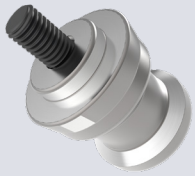	
型号 Model	DCPA-40	DCPB-40	DCPC-40
驱动方式 Drive mode			
气动 Drive mode			
手动 Manual	●	●	●
产品描述 Product description			
外形尺寸 Form factor	Φ40*45	Φ45*45	Φ40*45
夹紧力 Clamping force	适配零点定位 KSZ-115 Suitable for zero point clamps KSZ-115		
驱动压力 / 扭矩 Drive pressure/torque	60 N.m	60 N.m	60 N.m
应用特点			
共同特点 Common features	. 一次操作完成定位、固定和夹紧 . 几秒内更换工件和夹具 . 工件直接夹持 . 不锈钢版本 . 不受机床型号限制适合重型切削 . 可应用 WARWICK 所有的夹紧模块 . Positioning, fixing and clamping in one operation . Change workpieces and fixtures in seconds . The workpiece is clamped directly . Stainless steel version . Suitable for heavy cutting regardless of machine model . All WARWICK clamping modules can be used		
差异特点 Differential characteristics	. 定位拉丁 – 确定定位原点并锁紧 . 适用于单头夹紧站及以上使用 . 一个工装只能使用一个 . 可以单独使用 . Positioning clamp pin-determine the positioning origin and lock it .Suitable for single head workstation and above .Can use 1pcs only in a setup. .Can use alone	. 定向拉丁 – 辅助定位并锁紧 . 适用于双头夹紧站及以上使用 . 一个工装只能使用一个 . 需配合 DCPA 使用 . 拉钉只能使用一个 . Directional clamp pin-Assist in positioning and lock it . Suitable for double-head workstation and above . Can use 1pcs only in a setup . Needs to be used in combination with DCPA	. 锁紧拉丁 – 只有锁紧功能 . 适用于三头工作站及以上使用 . 一个工装不限制使用数量 . 需配合 DCPA 和 DCPB 使用 . Locking Clamp pin-Just locking function . Suitable for three-head workstation and above . No limited to the number of uses in a setup . Needs to be used in combination with DCPA and DCPB

点击图片了解更多 | Click on the image to learn more

	TPC 快换托盘 | TPC Quick change of pallets TPC-23/TPC-40					
	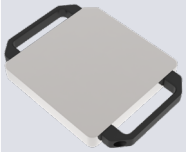	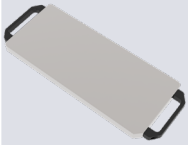	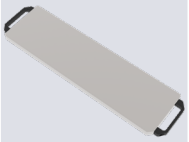	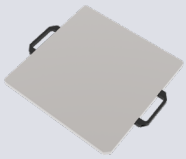	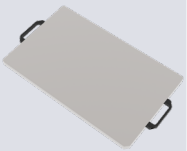	
适用零点定位型号 Suitable for zero-point positioning models						
KSZ-88	TPC23-88-T1	TPC23-88-T2	TPC23-88-T3	TPC23-88-T4	TPC23-88-T6	
KSZ-90	TPC23-90-T1	TPC23-90-T2	TPC23-90-T3	TPC23-90-T4	TPC23-90-T6	
KSZ-115	TPC40-115-T1	TPC40-115-T2	TPC40-115-T3	TPC40-115-T4	TPC40-115-T6	
产品描述 Product description						
材质 Material	Steel/aluminum	Steel/aluminum	Steel/aluminum	Steel/aluminum	Steel/aluminum	
高度 Height	20/25 mm	20/25 mm	20/25 mm	20/25 mm	20/25 mm	
中心距离 Center distance	150 / 200 mm	150 / 200 mm	150 / 200 mm	150 / 200 mm	150 / 200 mm	
驱动压力 / 扭矩 Drive pressure/torque	6.5 bar	6.5 bar	6.5 bar	6.5 bar	6.5 bar	
应用特点						
共同特点 Common features	. 提供钢和铝两种材质 . 托盘包含定位 / 定向拉紧销钉 . 可定制托盘 . 带有用于搬运的握把			. Available in both steel and aluminum . The tray contains positioning/directional tensioning pins . Customizable pallets . With grip for handling		
差异特点 Differential characteristics	. 使用 1 个定位拉钉和 1 个圆柱销钉 . Use 1pcs positioning clamp pin DCPA and 1pcs dowel pin	. 使用 1 个定位拉钉和 1 个定向拉钉 . Use 1pcs positioning pin DCPA and 1pcs directional pin DCPB	. 各使用 1 个定位拉钉 / 定向拉钉 / 锁紧拉钉 . Use 1pcs positioning pin DCPA,1pcs directional pin DCPB and 1pcs clamping pin DCPC	. 各使用 1 个定位拉钉 / 定向拉钉，以及 2 个锁紧拉钉 . Use 1pcs positioning pin DCPA /1pcs directional pin DCPB and 2pcs clamping pin DCPC	. 各使用 1 个定位拉钉 / 定向拉钉，以及 4 个锁紧拉钉 . Use 1pcs positioning pin DCPA ,1pcs directional pin DCPB, and 2pcs clamping DCPC	

点击图片了解更多 | Click on the image to learn more

	KSG 定位卡盘 | Positioning chucks KSG-52/96			
		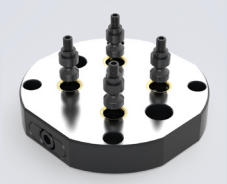	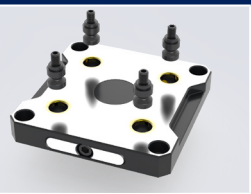	
型号 Model	KSG-52S	KSG-52R	KSG-96S	KSG-Pro
驱动方式 Drive mode				
气动 Drive mode				
手动 Manual	●	●	●	●
产品描述 Product description				
外形尺寸 Form factor	106*106*28	Φ156*28	180*180*28	167*167*28
夹紧力 Clamping force	15 KN	15 KN	15 KN	15 KN
中心距离 Center distance	52 mm	52 mm	96 mm	52 mm +96 mm
驱动压力 / 扭矩 Drive pressure/torque	30 N.m	30 N.m	30 N.m	30 N.m
应用特点				
共同特点 Common features	. 紧凑设计，占用工作空间小 . 标准的安装接口 . 铣削使用，高夹紧力 . 在切削过程中保持夹紧力		. Compact design with little workspace footprint . Standard mounting interface . Milling use, high clamping force . Maintains the clamping force during the cutting process	
差异特点 Differential characteristics	使用 52 型拉钉 Use a 52-type rivet		使用 96 型拉钉 Use a 96-type rivet	使用 52 型拉钉 Use a 52-type rivet 使用 96 型拉钉 Use a 96-type rivet

点击图片了解更多 | Click on the image to learn more

	KSG 定位拉钉 |Dowel pins 52S-16 / 96S-20			
				
型号 Model				
驱动方式 Drive mode				
气动 Drive mode				
手动 Manual	●	●		
产品描述 Product description				
外形尺寸 Form factor	Φ16*37	Φ20*39		
锁紧螺纹 Lock the thread	M8	M10		
适用范围 Scope of application	KSG52	KSG96		
驱动压力 / 扭矩 Drive pressure/torque	25 N.m	60 N.m		
应用特点				
共同特点 Common features				
差异特点 Differential characteristics				

点击图片了解更多 | Click on the image to learn more

	KSP 气动自定心虎钳 | Pneumatic self-centering vise KSP-75/100/150			
		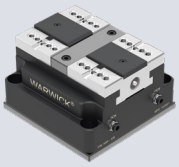		
型号 Model	KSP-75	KSP-100	KSP-150	
驱动方式 Drive mode				
气动 Drive mode	●	●	●	
手动 Manual				
产品描述 Product description				
外形尺寸 Form factor	125*125*84.5	150*150*97.5	215*250*127.5	
夹紧力 Clamping force	9 KN	15 KN	22 KN	
钳口宽度 / 行程 Clamping width/stroke	75 / 5 mm	100 / 5 mm	150 / 10 mm	
驱动压力 / 扭矩 Drive pressure/torque	6.5 bar	6.5 bar	6.5 bar	
应用特点				
共同特点 Common features	. 紧凑设计，占用工作空间小 . 可采用底部或者侧面接入压缩空气 . 2 个标准的卡爪安装接口 . 铣削使用，高夹紧力 . 在切削过程中保持夹紧力 . 可根据产品安装仿形夹爪 . 内置弹簧驱动，切断空气具有一定的夹紧力 . 卡爪接口两侧集成注油嘴，润滑功能面		. Compact design with a small footprint of working space . Compressed air can be connected to the bottom or side . 2 standard jaw mounting interfaces . Milling use, high clamping force . Maintains clamping force during cutting . Profiled grippers can be installed according to the product . Built-in spring drive, cutting off air has a certain clamping force , Integrated oil injectors on both sides of the jaw interface to lubricate the functional surface	
差异特点 Differential characteristics	. 使用 RZ-75/TRZ-75/YZ-75/YZL-75 卡爪 . 最大夹紧尺寸 125*125mm . Use RZ-75/TRZ-75/YZ-75/YZL-75 jaws . The maximum clamping size is 125*125mm	. 使用 RZ-100/TRZ-100/YZ-100/YZL-100 卡爪 . 最大夹紧尺寸 150*150mm . Use RZ-100/TRZ-100/YZ-100/YZL-100 jaws . The maximum clamping size is 150*150mm	. 使用 RZ-150/TRZ-150/YZ-150/YZL-150 卡爪 . 最大夹紧尺寸 200*250mm . Use RZ-150/TRZ-150/YZ-150/YZL-150 jaws . The maximum clamping size is 200*250mm	

点击图片了解更多 | Click on the image to learn more

KSP 气动自定心虎钳 | Pneumatic self-centering vise
KSP2-75/100/150

		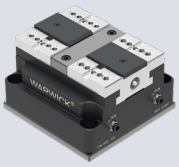		
型号 Model	KSP2-75	KSP2-100	KSP2-125	KSP2-150
驱动方式 Drive mode				
气动 Drive mode	●	●	●	
手动 Manual				
产品描述 Product description				
外形尺寸 Form factor	125*125*84.5	150*150*97.5	200*200*127.5	
夹紧力 Clamping force	13 KN	18 KN	27 KN	30 KN
钳口宽度 / 行程 Clamping width/stroke	75 / 4 mm	100 / 5 mm	125/ 8 mm	150 / 8 mm
驱动压力 / 扭矩 Drive pressure/torque	6.5 bar	6.5 bar	6.5 bar	6.5 bar
应用特点				
共同特点 Common features	. 紧凑设计，占用工作空间小 . 可采用底部或者侧面接入压缩空气 . 2 个标准的卡爪安装接口 . 铣削使用，高夹紧力 . 在切削过程中保持夹紧力 . 可根据产品安装仿形夹爪 . 内置弹簧驱动，切断空气具有一定的夹紧力 . 卡爪接口两侧集成注油嘴，润滑功能面		. Compact design with a small footprint of working space . Compressed air can be connected to the bottom or side . 2 standard jaw mounting interfaces . Milling use, high clamping force . Maintains clamping force during cutting . Profiled grippers can be installed according to the product . Built-in spring drive, cutting off air has a certain clamping force , Integrated oil injectors on both sides of the jaw interface to lubricate the functional surface	
差异特点 Differential characteristics	. 使用 RZ-75/TRZ-75/YZ-75/YZL-75 卡爪 . 最大夹紧尺寸 125*125mm . Use RZ-75/TRZ-75/YZ-75/YZL-75 jaws . The maximum clamping size is 125*125mm	. 使用 RZ-100/TRZ-100/YZ-100/YZL-100 卡爪 . 最大夹紧尺寸 150*150mm . Use RZ-100/TRZ-100/YZ-100/YZL-100 jaws . The maximum clamping size is 150*150mm	. 使用 RZ-125/TRZ-125/YZ-125/YZL-125 卡爪 . 最大夹紧尺寸 200*250mm . Use RZ-125/TRZ-125/YZ-125/YZL-125 jaws . The maximum clamping size is 200*250mm	. 使用 RZ-150/TRZ-150/YZ-150/YZL-150 卡爪 . 最大夹紧尺寸 200*250mm . Use RZ-150/TRZ-150/YZ-150/YZL-150 jaws . The maximum clamping size is 200*250mm

点击图片了解更多 | Click on the image to learn more

KSP 气动自定心虎钳 | Pneumatic self-centering vise
KSP2-75L/100L/150L

		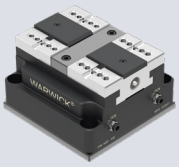		
型号 Model	KSP2-75L	KSP2-100L	KSP2-125L	KSP2-150L
驱动方式 Drive mode				
气动 Drive mode	●	●	●	●
手动 Manual				
产品描述 Product description				
外形尺寸 Form factor	125*125*84.5	150*150*97.5	215*250*127.5	
夹紧力 Clamping force	7 KN	10 KN	12 KN	16 KN
钳口宽度 / 行程 Clamping width/stroke	75 / 13 mm	100 / 16 mm	125 / 20 mm	150 / 20 mm
驱动压力 / 扭矩 Drive pressure/torque	6.5 bar	6.5 bar	6.5 bar	6.5 bar
应用特点				
共同特点 Common features	. 紧凑设计，占用工作空间小 . 可采用底部或者侧面接入压缩空气 . 2 个标准的卡爪安装接口 . 铣削使用，高夹紧力 . 在切削过程中保持夹紧力 . 可根据产品安装仿形夹爪 . 内置弹簧驱动，切断空气具有一定的夹紧力 . 卡爪接口两侧集成注油嘴，润滑功能面		. Compact design with a small footprint of working space . Compressed air can be connected to the bottom or side . 2 standard jaw mounting interfaces . Milling use, high clamping force . Maintains clamping force during cutting . Profiled grippers can be installed according to the product . Built-in spring drive, cutting off air has a certain clamping force , Integrated oil injectors on both sides of the jaw interface to lubricate the functional surface	
差异特点 Differential characteristics	. 使用 RZ-75/TRZ-75/YZ-75/YZL-75 卡爪 . 最大夹紧尺寸 125*125mm . Use RZ-75/TRZ-75/YZ-75/YZL-75 jaws . The maximum clamping size is 125*125mm	. 使用 RZ-100/TRZ-100/YZ-100/YZL-100 卡爪 . 最大夹紧尺寸 150*150mm . Use RZ-100/TRZ-100/YZ-100/YZL-100 jaws . The maximum clamping size is 150*150mm	. 使用 RZ-150/TRZ-150/YZ-150/YZL-150 卡爪 . 最大夹紧尺寸 200*250mm . Use RZ-150/TRZ-150/YZ-150/YZL-150 jaws . The maximum clamping size is 200*250mm	

点击图片了解更多 | Click on the image to learn more

	KSP 夹爪 | KSP Jaw Jaw-75/100/150					
	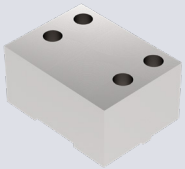	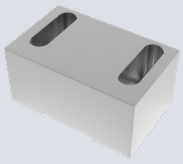	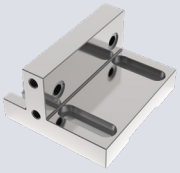	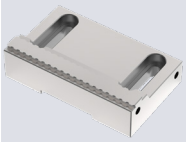		
型号 Model	RZ	TRZ	YZL	YZ		
驱动方式 Drive mode						
气动 Drive mode						
手动 Manual	●	●	●	●		
产品描述 Product description						
夹紧力 Clamping force	对应接口的虎钳 Corresponds to interface vise					
夹持宽度 / 行程 Clamping width/stroke	75/100/150	75/100/150	75/100/150	75/100/150		
驱动压力 / 扭矩 Drive pressure/torque	对应接口的虎钳 Corresponds to interface vise					
应用特点						
共同特点 Common features	. 卡爪材料：铝合金 / 钢 . 卡爪没有硬化，可加工 . 工件可直接夹持 . 适用 KSP 系列虎钳 . Jaw material: aluminum / steel . The jaws are not hardened and can be processed . The workpiece can be clamped directly . Suitable for KSP series vises		. 卡爪材料：合金钢 . 硬化卡爪，不可加工 . 工件可直接夹持 . 适用 KSP 系列虎钳 . Jaw material: alloy steel . Hardened jaws, not machinable . The workpiece can be clamped directly . Suitable for KSP series vises			
差异特点 Differential characteristics	. 卡爪固定安装，钳口位置不可调整 . The jaws are fixed and installed, and the jaw position is not adjustable	. 卡爪含有 1.5X60° 齿，可调整卡爪位置 . The jaws have 1.5X60° teeth and can adjust the jaw position	. 卡爪含有 1.5X60° 齿，可调整卡爪位置 . 卡爪可安装其他卡爪 . The jaws have 1.5X60° teeth and can adjust the jaw position . Additional jaws can be installed	. 卡爪含有 1.5X60° 齿，可调整卡爪位置 . 低高度设计，带有齿形台阶，适合粗加工 . The jaws have 1.5X60° teeth and can adjust the jaw position . Low height design with toothed steps for roughing		

点击图片了解更多 | Click on the image to learn more

KSS 手动自定心虎钳 | KSS manual self-centering vise
KSS100/KSS125

	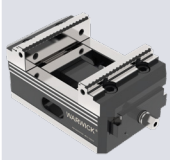	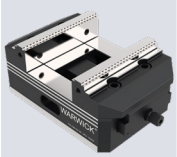	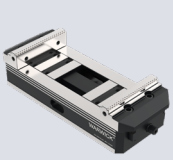			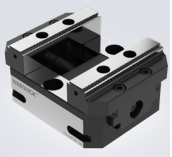	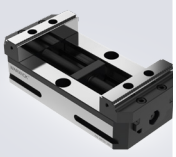
型号 Model	KSS100-150	KSS125-180	KSS125-300	KSF75-100	KSF75-130	KSF125-150	KSF125-250
驱动方式 Drive mode							
气动 Drive mode							
手动 Manual	●	●	●	●	●	●	●
产品描述 Product description							
外形尺寸 Dimension	100*150*78	125*180*83	125*300*83	75*100*56	75*130*56	125*150*80	125*250*80
钳口宽度 Jaw width	100 mm	125 mm	125 mm	75 mm	75 mm	125 mm	125 mm
夹紧力 Clamping force	25 KN	25 KN	25 KN	15 KN	15KN	20 KN	20 KN
正向夹持行程 Forward clamping range	0 - 80 mm	0 - 80 mm	0 - 210 mm	0 - 38 mm	0 - 68 mm	0 - 78 mm	0 - 176 mm
反向夹持行程 Reverse clamping range	60 - 140 mm	80 - 165 mm	77 - 288 mm	45 - 76 mm	46 -104 mm	75 - 126 mm	75- 220 mm
驱动压力 / 扭矩 Drive pressure/ torque	100 N.m	100 N.m	100 N.m	70 N.m	70 N.m	100 N.m	100 N.m
应用特点							
共同特点 Common features	. 密封螺杆设计，中心位置可调 . 调整夹持范围 . 可用于自动化托盘 . 可直接与 KSZ115 系列快换系统配合 . 可根据产品安装仿形夹爪 . 带有排水设计			. Sealed screw design with adjustable center position . Adjust the clamping range . Can be used to automate pallets . It can be directly combined with the KSZ115 series quick-change system . Profiled grippers can be installed according to the product . With drainage design			
差异特点 Differential characteristics	. 钳口宽度 100mm . The jaw width is 100mm	. 钳口宽度 125mm . The jaw width is 125mm	. 钳口宽度 125mm . The jaw width is 125mm	. 钳口宽度 75mm . The jaw width is 75mm	. 钳口宽度 75mm . The jaw width is 75mm	. 钳口宽度 125mm . The jaw width is 125mm	. 钳口宽度 125mm . The jaw width is 125mm

点击图片了解更多 | Click on the image to learn more

KSD50 多工位虎钳 | KSD50 Multi-station vise

KSD-50-FD

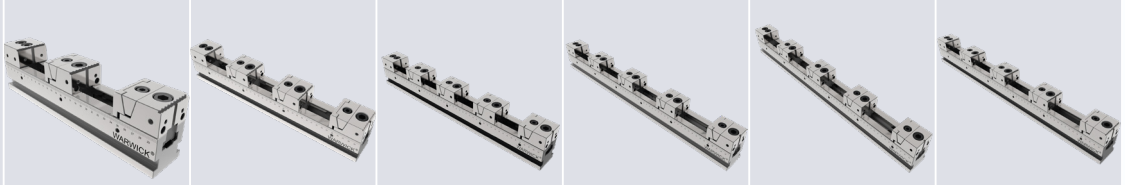

型号 Model	KSD50-300	KSD50-400	KSD50-500	KSD50-600	KSD50-650	KSD50-700
驱动方式 Drive mode						
手动 Manual	●	●	●	●	●	●
产品描述 Product description						
夹紧力 Clamping force	17.8 KN	17.8 KN	17.8 KN	17.8 KN	17.8 KN	17.8 KN
单工位最大夹紧尺寸 1 stations, max clamp size	192 mm	292 mm	392 mm	492 mm	542 mm	592 mm
双工位最大夹紧尺寸 2 stations, max clamp size	67 mm	117 mm	167 mm	217 mm	242 mm	267 mm
三工位最大夹紧尺寸 3 stations, max clamp size	25 mm	58 mm	92 mm	125 mm	142 mm	159 mm
四工位最大夹紧尺寸 4 stations, max clamp size	4 mm	29 mm	54 mm	79 mm	92 mm	105 mm
五工位最大夹紧尺寸 5 stations, max clamp size	×	12 mm	32 mm	52 mm	62 mm	72 mm
六工位最大夹紧尺寸 6 stations, max clamp size	×	×	17 mm	33 mm	42 mm	51 mm
七工位最大夹紧尺寸 7 stations, max clamp size	×	×	6 mm	20 mm	27 mm	34 mm
八工位最大夹紧尺寸 8 stations, max clamp size	×	×	×	10 mm	17 mm	24 mm
驱动压力 / 扭矩 Drive pressure/torque	30 N.m	30 N.m	30 N.m	30 N.m	30 N.m	30 N.m
应用特点						
共同特点 Common features	. 虎钳卡爪宽度 50 mm，高度 30 mm . 可定制台阶齿形卡爪 . 单一方向夹紧产品 . 同系列夹爪可通用 . 可增加或减少工位 . 可直接与 KSZ90 和 KSZ88 系列快换系统配合 . 导轨齿面采用研磨工艺制造 . 提供多种卡爪选择			. Vice jaw width 50 mm，Height 30 mm . Customizable step toothed jaws . Single-direction clamping products . The gripper jaws of the same series can be used universally . Stations can be increased or decreased . It can be directly combined with the KSZ90 and KSZ88 series quick-change systems . The tooth surface of the guide rail is manufactured by grinding process . A variety of jaw options are available		
差异特点 Differential characteristics	长度：300mm Length: 300mm	长度：400mm Length: 400mm	长度：500mm Length: 500mm	长度：600mm Length: 600mm	长度：650mm Length: 650mm	长度：700mm Length: 700mm

点击图片了解更多 | Click on the image to learn more

KSD50 多工位虎钳 | KSD50 Multi-station vise

KSD-50-MD

						
型号 Model	KSD50-300	KSD50-400	KSD50-500	KSD50-600	KSD50-650	KSD50-700
驱动方式 Drive mode						
手动 Manual	●	●	●	●	●	●
产品描述 Product description						
夹紧力 Clamping force	17.8 KN	17.8 KN	17.8 KN	17.8 KN	17.8 KN	17.8 KN
单工位最大夹紧尺寸 1 stations, max clamp size						
双工位最大夹紧尺寸 2 stations, max clamp size	78 mm	128 mm	178 mm	228 mm	253 mm	278 mm
三工位最大夹紧尺寸 3 stations, max clamp size						
四工位最大夹紧尺寸 4 stations, max clamp size	20 mm	45 mm	70 mm	95 mm	108 mm	121 mm
五工位最大夹紧尺寸 5 stations, max clamp size						
六工位最大夹紧尺寸 6 stations, max clamp size	×	18 mm	35 mm	50 mm	58 mm	66 mm
七工位最大夹紧尺寸 7 stations, max clamp size						
八工位最大夹紧尺寸 8 stations, max clamp size	×	4 mm	16 mm	29 mm	35 mm	41 mm
驱动压力 / 扭矩 Drive pressure/torque	60 N.m	60 N.m	60 N.m	60 N.m	60 N.m	60 N.m
应用特点						
共同特点 Common features	. 虎钳卡爪宽度 50 ㎜，高度 30 ㎜ . 可定制台阶齿形卡爪 . 单一方向夹紧产品 . 同系列夹爪可通用 . 可增加或减少工位 . 可直接与 KSZ90 和 KSZ88 系列快换系统配合 . 导轨齿面采用研磨工艺制造 . 提供多种卡爪选择			. Vice jaw width 50 mm，Height 30 mm . Customizable step toothed jaws . Single-direction clamping products . The gripper jaws of the same series can be used universally . Stations can be increased or decreased . It can be directly combined with the KSZ90 and KSZ88 series quick-change systems . The tooth surface of the guide rail is manufactured by grinding process . A variety of jaw options are available		
差异特点 Differential characteristics	长度：300㎜ Length: 300mm	长度：400㎜ Length: 400mm	长度：500㎜ Length: 500mm	长度：600㎜ Length: 600mm	长度：650㎜ Length: 650mm	长度：700㎜ Length: 700mm

点击图片了解更多 | Click on the image to learn more

KSD88 多工位虎钳 | KSD88 Multi-station vise

KSD-88-FD

		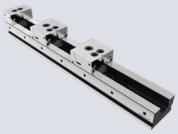	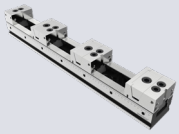		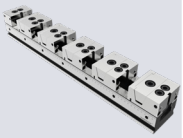	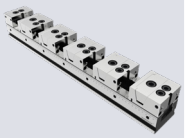
型号 Model	KSD88-300	KSD88-400	KSD88-500	KSD88-600	KSD88-650	KSD88-700
驱动方式 Drive mode						
手动 Manual	●	●	●	●	●	●
产品描述 Product description						
夹紧力 Clamping force	35 KN	35 KN	35 KN	35 KN	35 KN	35 KN
单工位最大夹紧尺寸 1 stations, max clamp size	167 mm	267 mm	367 mm	467 mm	517 mm	567 mm
双工位最大夹紧尺寸 2 stations, max clamp size	42 mm	92 mm	142 mm	192 mm	217 mm	242 mm
三工位最大夹紧尺寸 3 stations, max clamp size	×	33 mm	67 mm	100 mm	117 mm	133 mm
四工位最大夹紧尺寸 4 stations, max clamp size	×	×	29 mm	54 mm	67 mm	79 mm
五工位最大夹紧尺寸 5 stations, max clamp size	×	×	×	27 mm	37 mm	47 mm
六工位最大夹紧尺寸 6 stations, max clamp size	×	×	×	×	17 mm	25 mm
七工位最大夹紧尺寸 7 stations, max clamp size	×	×	×	×	×	10 mm
八工位最大夹紧尺寸 8 stations, max clamp size	×	×	×	×	×	×
驱动压力 / 扭矩 Drive pressure/torque	80 N.m	80 N.m	80 N.m	80 N.m	80 N.m	80 N.m
应用特点						
共同特点 Common features	. 虎钳卡爪宽度 88 ㎜，高度 40 ㎜ . 可定制台阶齿形卡爪 . 单一方向夹紧产品 . 同系列夹爪可通用 . 可增加或减少工位 . 可直接与 KSZ115 系列快换系统配合 . 导轨齿面采用研磨工艺制造 . 提供多种卡爪选择			. Vice jaw width 88 mm，Height 40 mm . Customizable step toothed jaws . Single-direction clamping products . The gripper jaws of the same series can be used universally . Stations can be increased or decreased . It can be directly combined with the KSZ90 series quick-change systems . The tooth surface of the guide rail is manufactured by grinding process . A variety of jaw options are available		
差异特点 Differential characteristics	长度：300㎜ Length: 300mm	长度：400㎜ Length: 400mm	长度：500㎜ Length: 500mm	长度：600㎜ Length: 600mm	长度：650㎜ Length: 650mm	长度：700㎜ Length: 700mm

点击图片了解更多 | Click on the image to learn more

KSD88 多工位虎钳 | KSD88 Multi-station vise

KSD-88-MD

	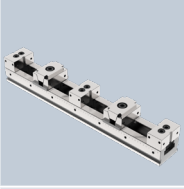	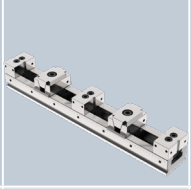		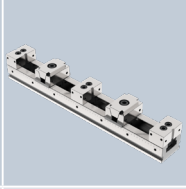	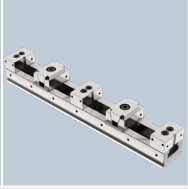	
型号 Model	KSD88-300	KSD88-400	KSD88-500	KSD88-600	KSD88-650	KSD88-700
驱动方式 Drive mode						
手动 Manual						
产品描述 Product description	●	●	●	●	●	●
夹紧力 Clamping force	35 KN	35 KN	35 KN	35 KN	35 KN	35 KN
单工位最大夹紧尺寸 1 stations, max clamp size						
双工位最大夹紧尺寸 2 stations, max clamp size	63 mm	113 mm	163 mm	213 mm	238 mm	263 mm
三工位最大夹紧尺寸 3 stations, max clamp size						
四工位最大夹紧尺寸 4 stations, max clamp size	×	26 mm	51 mm	76 mm	88 mm	101 mm
五工位最大夹紧尺寸 5 stations, max clamp size						
六工位最大夹紧尺寸 6 stations, max clamp size	×	×	14 mm	30 mm	38 mm	47 mm
七工位最大夹紧尺寸 7 stations, max clamp size						
八工位最大夹紧尺寸 8 stations, max clamp size	×	×	×	10 mm	18 mm	27 mm
驱动压力 / 扭矩 Drive pressure/torque	100 N.m	100 N.m	100 N.m	100 N.m	100 N.m	100 N.m
应用特点						
共同特点 Common features	. 虎钳卡爪宽度 88 ㎜，高度 40 ㎜ . 可定制台阶齿形卡爪 . 单一方向夹紧产品 . 同系列夹爪可通用 . 可增加或减少工位 . 可直接与 KSZ90 和 KSZ88 系列快换系统配合 . 导轨齿面采用研磨工艺制造 . 提供多种卡爪选择			. Vice jaw width 88 mm，Height 40 mm . Customizable step toothed jaws . Single-direction clamping products . The gripper jaws of the same series can be used universally . Stations can be increased or decreased . It can be directly combined with the KSZ90 and KSZ88 series quick-change systems . The tooth surface of the guide rail is manufactured by grinding process . A variety of jaw options are available		
差异特点 Differential characteristics	长度：300㎜ Length: 300mm	长度：400㎜ Length: 400mm	长度：500㎜ Length: 500mm	长度：600㎜ Length: 600mm	长度：650㎜ Length: 650mm	长度：700㎜ Length: 700mm

点击图片了解更多 | Click on the image to learn more

KSD 多工位虎钳配件 | KSD Multi-station vise accessories
FD / FD-T / MD / MD-T / GD / GD-T

	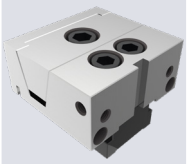	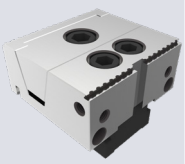	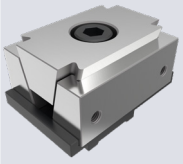	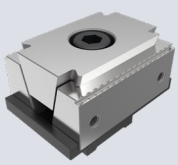	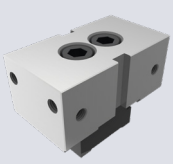	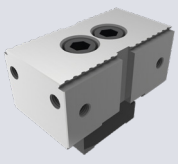
型号 Model	50-FD	50-FDT	50-MD	50-MDT	50-GD	50-GDT
型号 Model	88-FD	88-FDT	88-MD	88-MDT	88-GD	88-GDT
驱动方式 Drive mode						
手动 Manual	●	●	●	●	●	●
驱动压力 / 扭矩 Drive pressure/torque	30/80 N.m	30/80 N.m	30/80 N.m	30/80 N.m	30/80 N.m	30/80 N.m
应用特点						
共同特点 Common features	. 采用研磨工艺 . 可单独使用或配合 KSD 导轨使用 . 经过硬化处理 . 模块化设计，安装接口标准且统一 . Grinding process is adopted . Can be used alone or in combination with KSD rails . Hardened . Modular design, standard and uniform mounting interface					
差异特点 Differential characteristics	. 单一方向夹紧，每次夹紧一个工件 . Clamping in one direction, one workpiece at a time	. 单一方向夹紧，每次夹紧一个工件 . 带有齿形台阶，适合粗加工 . Clamping in one direction, one workpiece at a time . With toothed steps, suitable for roughing	. 两个方向夹紧，每次夹紧两个工件 . Clamping in two directions, two workpieces at a time	. 两个方向夹紧，每次夹紧两个工件 . 带有齿形台阶，适合粗加工 . Clamping in two directions, two workpieces at a time . With toothed steps, suitable for roughing	. 固定基准面使用 . Fixed datum use	. 固定基准面使用 . 带有齿形台阶 . Fixed datum use . With toothed steps, it is more suitable for roughing

点击图片了解更多 | Click on the image to learn more

KSE 机械夹紧系统 | KSE Mechanical Clamping System

KSE

型号 Model	KSE 25-6	KSE 32-8S	KSE 32-8	KSE 32-8P	KSE 50-12	KSE 50-12P
驱动方式 Drive mode						
手动 Manual	●	●	●	●	●	●
产品描述 Product description						
外形尺寸 Form factor	25*29*12	32*34*15	32*40*15	32*40*15	50*39*22	50*39*22
夹紧力 Clamping force	11.2 KN	15.8 KN	15.8 KN	15.8 KN	28.6 KN	28.6 KN
钳口宽度 Clamping width	25 mm	32 mm	32 mm	32 mm	50 mm	50 mm
行程 stroke	4	4	4.5	4.5	4.5	4.5
驱动压力 / 扭矩 Drive pressure/torque	18 N.m	30 N.m	30 N.m	30 N.m	76 N.m	76 N.m
应用特点						
共同特点 Common features	. 同时夹紧两个工件 . 可定制齿形夹紧面			. Clamp two workpieces at the same time . Toothed clamping surfaces can be customized		
差异特点 Differential characteristics	夹紧面有螺纹 There are threaded holes in the clamping surface	夹紧面没有螺纹 There are no threaded holes in the clamping surface	夹紧面有螺纹 There are threaded holes in the clamping surface	夹紧面没有螺纹 There are no threaded holes in the clamping surface	夹紧面有螺纹 There are threaded holes in the clamping surface	夹紧面没有螺纹 There are no threaded holes in the clamping surface

点击图片了解更多 | Click on the image to learn more

KSH 机械夹紧系统 | KSE Mechanical Clamping System

KSH

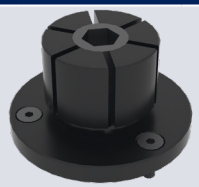

型号 Model							
型号 Model	KSH12-M4	KSH14-M6	KSH20-M8	KSH27-M10	KSH35-M12	KSH51-M16	KSH77-M16
驱动方式 Drive mode							
手动 Manual	●	●	●	●		●	●
产品描述 Product description							
外形尺寸 Form factor	Φ30*21.8	Φ30*24.9	Φ38*24.9	Φ50*28.6	Φ58*31.8	Φ78*39.6	Φ108*45.5
夹紧力 Clamping force	3 KN	6 KN	8 KN	13 KN	15 KN	26 KN	26 KN
行程 stroke	Φ8-12.4	Φ12.2-14.2	Φ13.5-20	Φ18-27	Φ25.4-35.3	Φ30-51	Φ30-77
驱动压力 / 扭矩 Drive pressure/torque	3.5 N.m	12 N.m	24 N.m	42 N.m	105 N.m	200 N.m	200 N.m
应用特点							
共同特点 Common features	. 标准的安装尺寸				. Standard installation dimensions		
差异特点 Differential characteristics	. 夹紧范围不同 . The clamping range is different	. 夹紧范围不同 . The clamping range is different	. 夹紧范围不同 . The clamping range is different	. 夹紧范围不同 . The clamping range is different	. 夹紧范围不同 . The clamping range is different	. 夹紧范围不同 . The clamping range is different	. 夹紧范围不同 . The clamping range is different

SIMPLE-KSZ
只为节省时间

SIMPLE-KSZ 是模块化的快速更换托盘系统，用于非常快速且极其精确的定位并固定 3 轴，4 轴或 5 轴加工中心上的工件，夹紧装置或其他设备。 它减少了多达 90% 的重新装备时间，因此可以最佳地利用机器产能。

SIMPLE-KSZ
Just to save time

SIMPLE-KSZ is the modular quick-change pallet system for very fast and extremely precise resetting of workpieces, clamping devices or other equipment on modern 3-, 4- or 5-axis machining centers. It reduces the retooling times up to 90% and thus provides optimal utilization of the machine capacity.

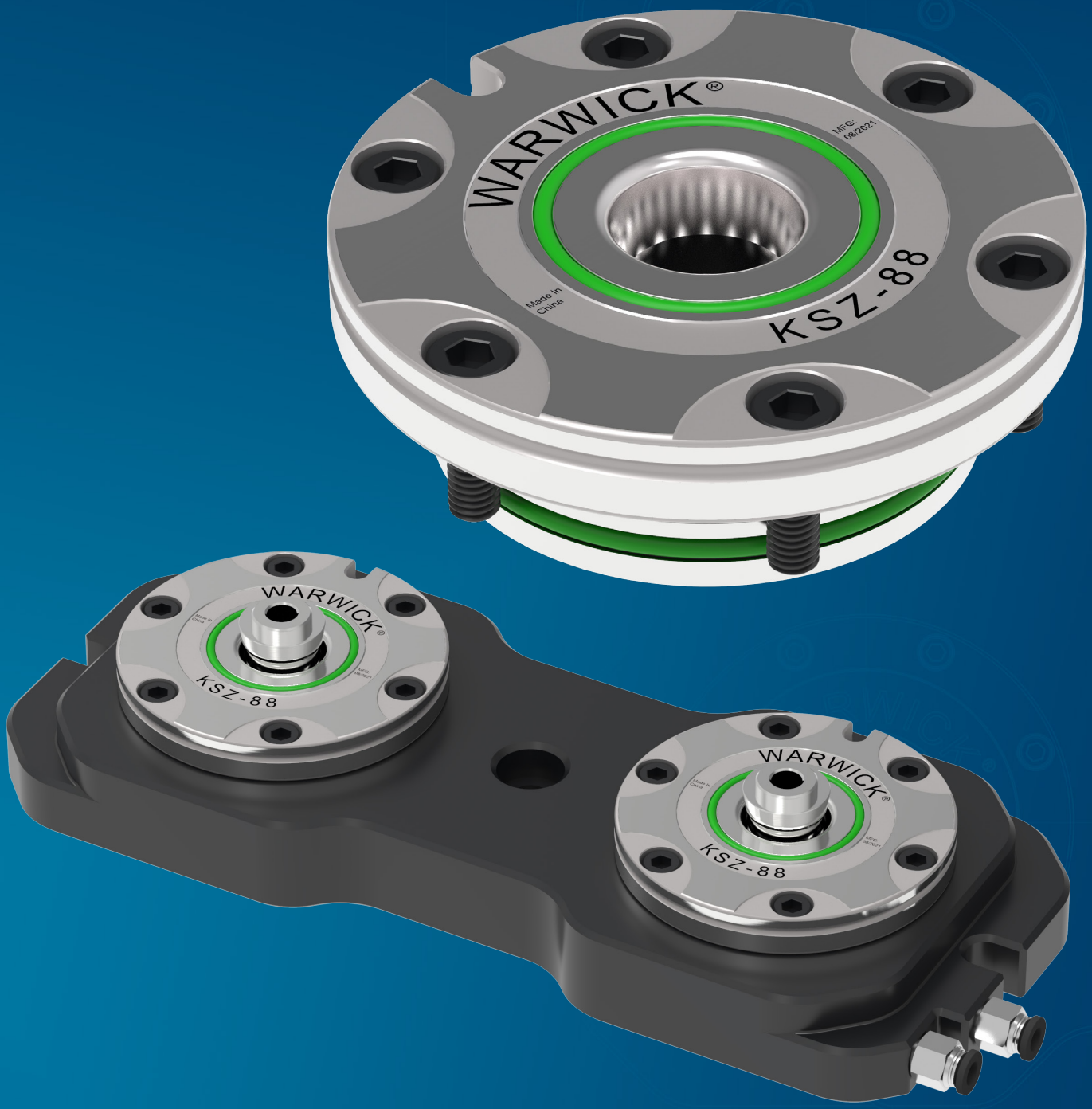

优势 – 您的利益

WARWICK 模块化系统
标准夹紧装置的无数组合
适用于不同类型的机器

所有模块均可在 6.5 bar 的系统压力下运行

通过短锥度进行定位非常容易的连接过程，重复精度 <0.005 mm

获得专利的驱动系统可实现最大的下拉力，因此夹紧非常牢固，不会产生振动

模块为防锈材料，完全密封，使用寿命长，过程可靠性最高

包括增加的下拉力功能和自锁功能（在切断空气时仍然可以使用），最大限度地提高 CNC 机床性能，因此非常高效

每个 KSZ 模块都使用通用的夹紧销尺寸，以确保 100% 兼容，而不会造成混淆或错误操作的风险

气流从中心喷出，以保护更换接口不受冷却液，灰尘和碎屑的影响

Advantages – Your benefits

WARWICK modular system
Innumerable combinations of standard clamping devices
suitable for different types of machines

All modules can be operated at a system pressure of 6.5 bar Additional pressure intensifiers are not required

Positioning via short taper Very easy joining process at a repeat accuracy of < 0.005 mm

Patented drive system achieves maximum pull-down force, so very firm clamping without vibration

The module is made of anti-rust material, completely sealed, has a long service life, and the highest process reliability

Includes increased pull-down force function and self-locking function (still available when air is cut off), maximizes CNC machine performance and is therefore very efficient

Every KSZ module uses a common clamping pin size to ensure 100% compatibility without the risk of confusion or incorrect operation

Air flow is ejected from the center to protect the replacement interface from coolant, dust and debris

SIMPLE-KSZ
技术原理

夹紧过程由集成的弹簧组件激活。力的传递是通过获得专利的驱动运动学进行，该运动学将可用的弹簧力转换为在夹紧的钢球上的最大下拉力。自动保持夹紧状态，并集成增加下拉力功能。打开是在 6.5 bar 系统压力下进行的。

SIMPLE-KSZ
Technology

The clamping process is activated by an integrated spring assembly. The transmission of force is via a patented drive kinematics that converts the available spring force into a maximum pull-down force on the clamped steel ball. Automatically maintains the clamping state and integrates the function of increasing the pull-down force. Opening is performed at 6.5 bar system pressure.

简单 = 可靠

1 气流从中心喷出，以保护更换接口不受冷却液，灰尘和碎屑的影响

2 获得专利的结构驱动系统可在活塞和钢球之间提供极高的下拉力

3 持续进入压缩空气增加下拉力

4 平面密封件可在加工过程中保护界面，减少工件或夹紧托盘的沉积

5 完全密封的系统因此绝对免维护

6 大平面，以获得最佳支撑和最高刚性

7 下沉式沉头螺钉便于清洁平面

SIMPLE=RELIABLE

1 Air flow is ejected from the center to protect the replacement interface from coolant, dust and debris

2 Patented structural drive system provides extremely high pull-down force between the piston and the steel ball

3 Continuous flow of compressed air increases the pulling force

4 Flat seal to protect the interface during machining Dampens the deposition of the workpiece or clamping pallet

5 Completely sealed system Therefore absolutely maintenance-free

6 Large flat surfaces for best support and highest rigidity

7 Lower-lying countersunk screws For easy cleaning of the flat surface

SIMPLE - KSZ - 88

快速更换托盘系统 | Quick-change Pallet Systems

KSZ - 88

快速更换托盘模块 / **Quick-change Pallet Module**

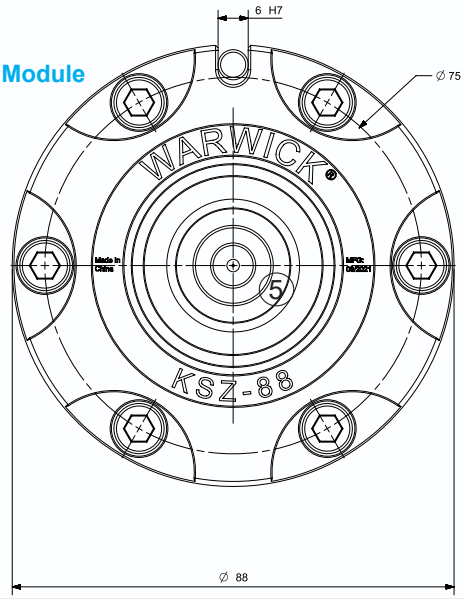

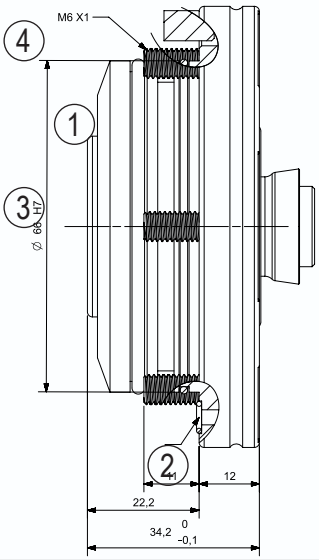

KSZ - 88 - T1

单头夹紧站 / **1-way Clamping Station**

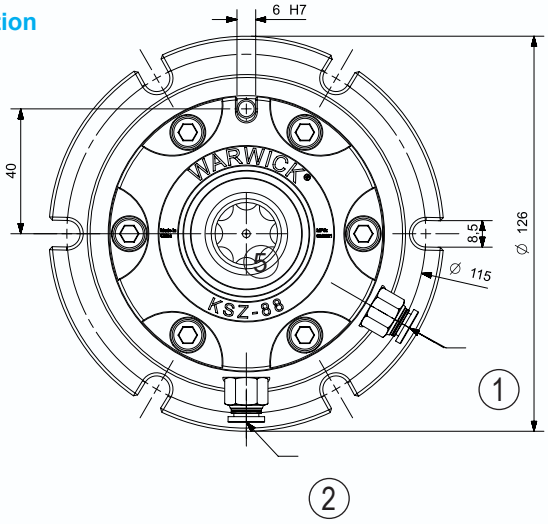

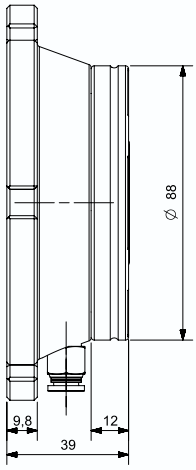

KSZ - 88 - T2

双头夹紧站 / **2-way Clamping Station**

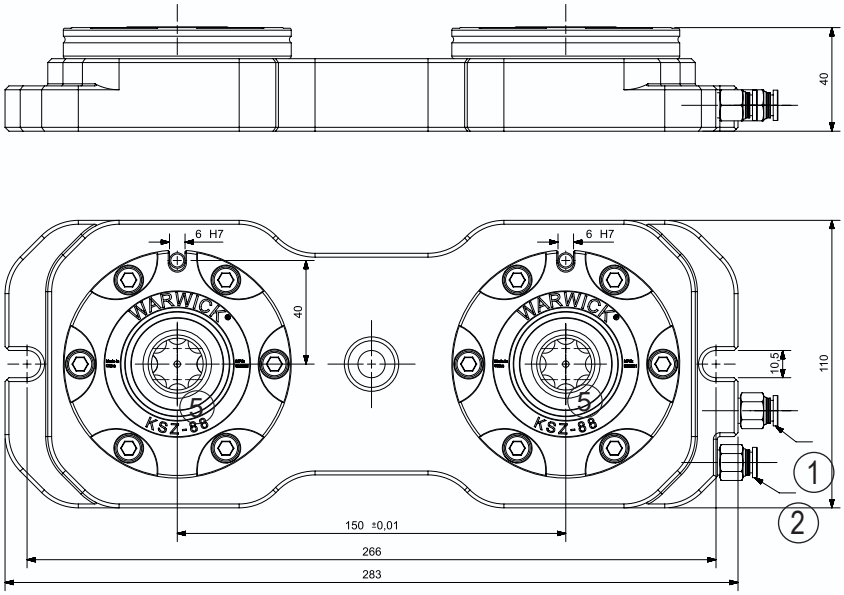

1 进气解除锁紧 /The intake air is unlocked
2 进气增加夹紧力 /The intake air increases the clamping force
3 安装定位尺寸 / Installation position size
4 固定锁紧螺丝 /Fixed lock screw
5 清洁气孔 /Clean stomata

KSZ - 88 - T3

三头夹紧站 / 3-way Clamping Station

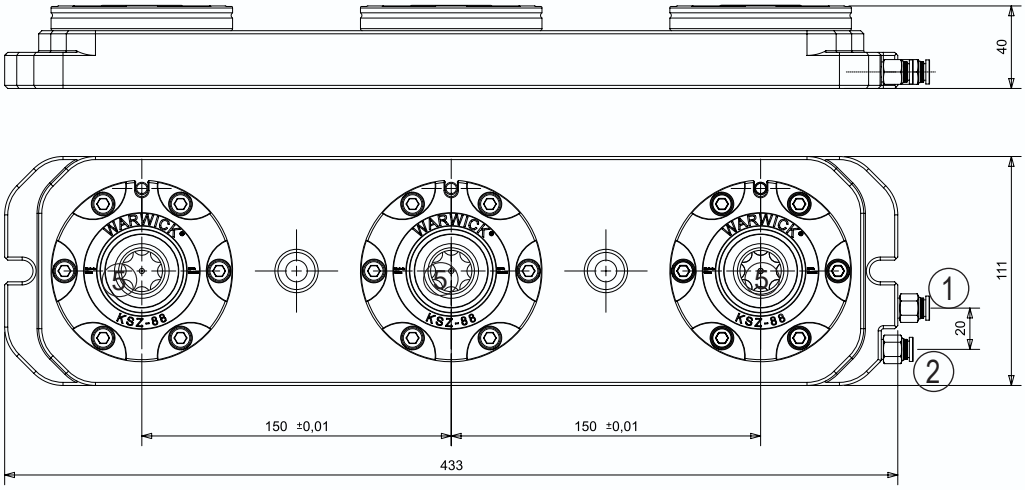

KSZ - 88 - R3

三头夹紧站 / 3-way Clamping Station

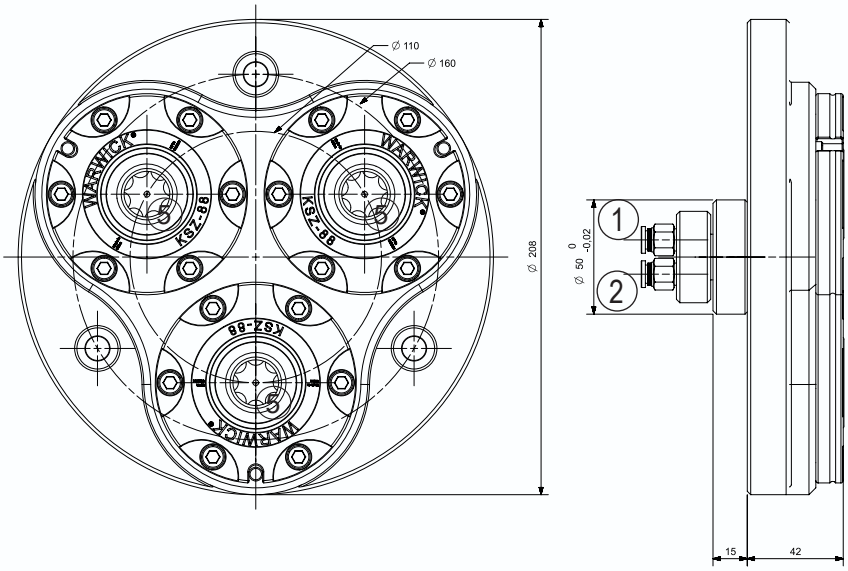

KSZ - 88 - 2N

双头夹紧站 / 2-way Clamping Station

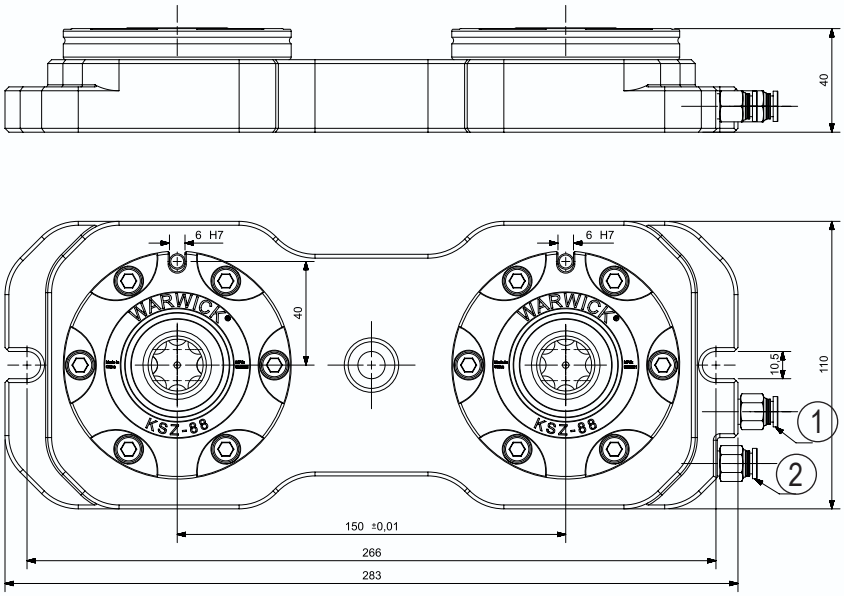

1 进气解除锁紧 /The intake air is unlocked
2 进气增加夹紧力 /The intake air increases the clamping force
3 安装定位尺寸 / Installation position size
4 固定锁紧螺丝 /Fixed lock screw
5 清洁气孔 /Clean stomata

技术数据 | Technical data

型号 Description	编号 ID	中心距离 Center distance [mm]	重复精度 Repeat accuracy [mm]	打开锁紧时间 Closing/opening time [S]	6.8 bar 锁紧力 6.8 bar clamping force [kN]	弹簧锁紧力 Spring locking force [kN]	工作气压 Operating pressure [bar]	库存 Stock	重量 Weight [kg]
KSZ88	10000	-	0.005	0.6	6.5	2.1	5.5-9	●	0.9
KSZ88-T1	10010	-	0.005	0.6	6.5	2.1	5.5 - 9	●	2.5
KSZ88-T2	10020	150	0.005	0.6	2 X 6.5	2 X 3	5.5 - 9	●	7.5
KSZ88-T3	10030	150	0.005	0.6	3 X 6.5	3 X 2.1	5.5 - 9	●	11.5
KSZ88-R3	10040	Φ110	0.005	0.6	3 X 6.5	3 X 2.1	5.5 - 9	-	8.5
KSZ88-2N	10050	150	0.005	0.6	N X 6.5	N X 2.1	5.5 - 9	●	6.9

• 有关上述设备版本的详细说明，请参见第 A3 页和第 A4 页。
• 从第 B 页开始，匹配系统和顶钳口。

供货范围

夹紧站，包括 SIMPLE-KSZ 88 模块，操作手册；
不包含夹紧拉钉或分度销

6.8 bar 夹紧力

同时使用 6.8bar 压力和弹簧组件产生夹紧力，该压力由传感器测量。

弹簧组件的夹紧力

仅使用弹簧组件产生夹紧力，该压力由传感器测量。

• See pages B3 and B4 for detailed descriptions of the above device versions.
• From page B, match the system and top jaws.

Scope of delivery

Clamping table, including SIMPLE-KSZ 88 module, operating manual;
no clamping pins or indexing pins

6.8 bar clamping force

A clamping force is generated simultaneously using a 6.8 bar pressure and a spring assembly, which is measured by a sensor.

The clamping force of the spring assembly

Only a spring assembly is used to generate a clamping force, which is measured by a sensor.

TPC23 - 88 - T1 快速更换托盘模块 / Quick-change Pallet Module

型号 Description	编号 ID	材料 Material	平面平行度 Plane parallelism [mm]	高度 H Height H [mm]	重量 Weight [kg]
TPC 23 - 88 - T1A	10400-A	铝 | Aluminum	0.05	25	2.5
TPC 23 - 88 - T1S	10400-S	钢 | Steel	0.02	20	5.5

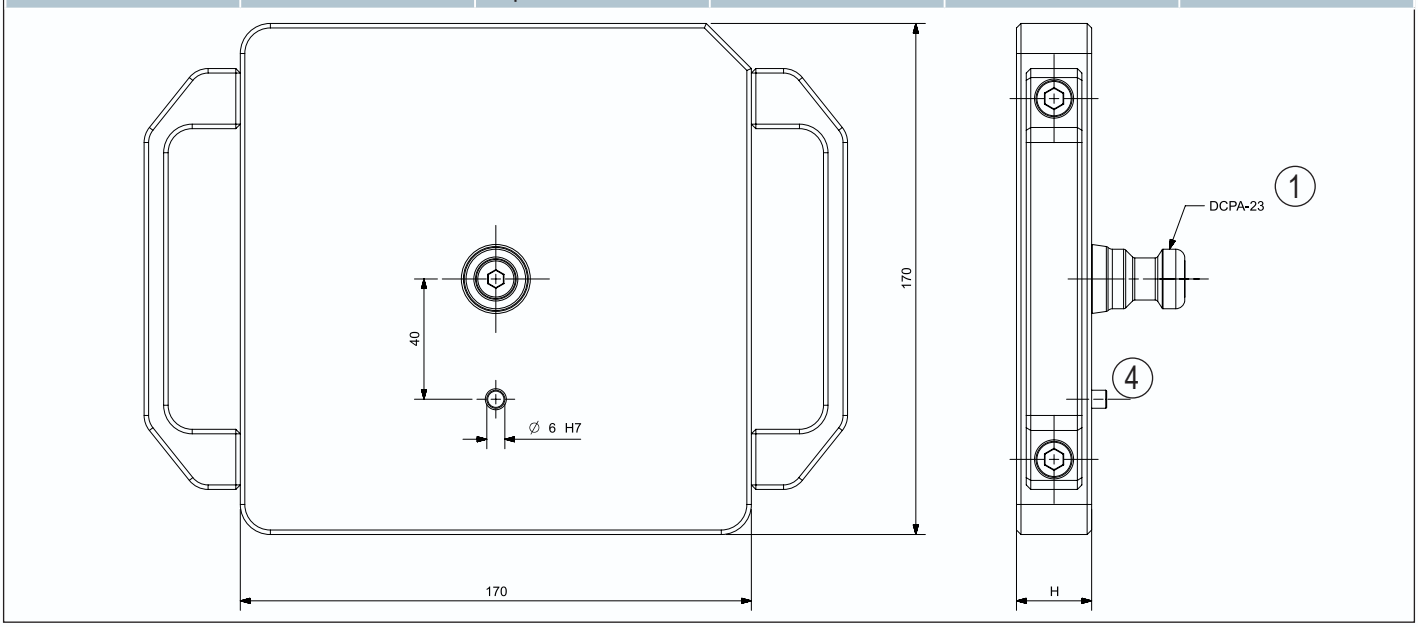

TPC23 - 88 - T1 快速更换托盘模块 / Quick-change Pallet Module

型号 Description	编号 ID	材料 Material	平面平行度 Plane parallelism [mm]	高度 H Height H [mm]	重量 Weight [kg]
TPC 23 - 88 - T2A	10421-A	铝 | Aluminum	0.05	25	4.2
TPC 23 - 88 - T2S	10421-S	钢 | Steel	0.02	20	9.5

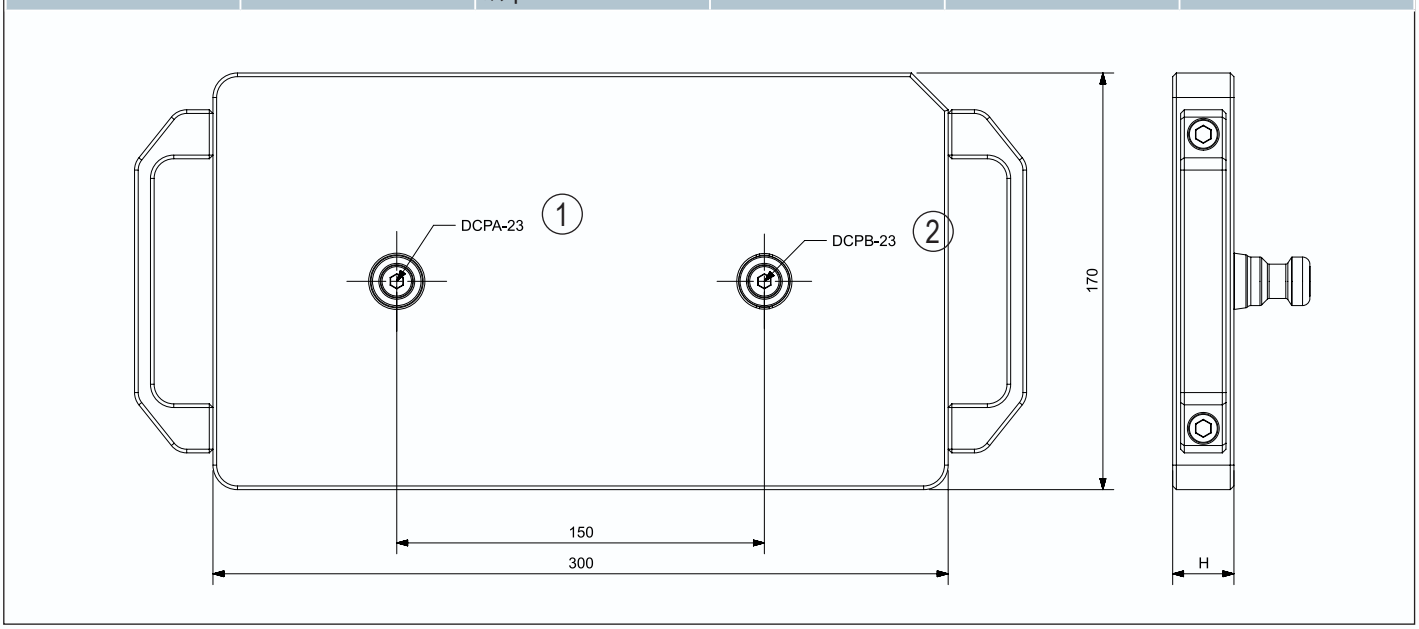

1 A 型定位拉钉 /Type A Centering pin 2 B 型补偿拉钉 / Type A Positioning pin 3 C 型锁紧拉钉 / Type C Clamping pin 4 圆柱销钉 / Cylindrical dowels

TPC23 - 88 - T3 快速更换托盘模块 / Quick-change Pallet Module

型号 Description	编号 ID	材料 Material	平面平行度 Plane parallelism [mm]	高度 H Height H [mm]	重量 Weight [kg]
TPC 23 - 88 - T3A	10400-A	铝 | Aluminum	0.05	25	6.2
TPC 23 - 88 - T3S	10400-S	钢 | Steel	0.02	20	14.3

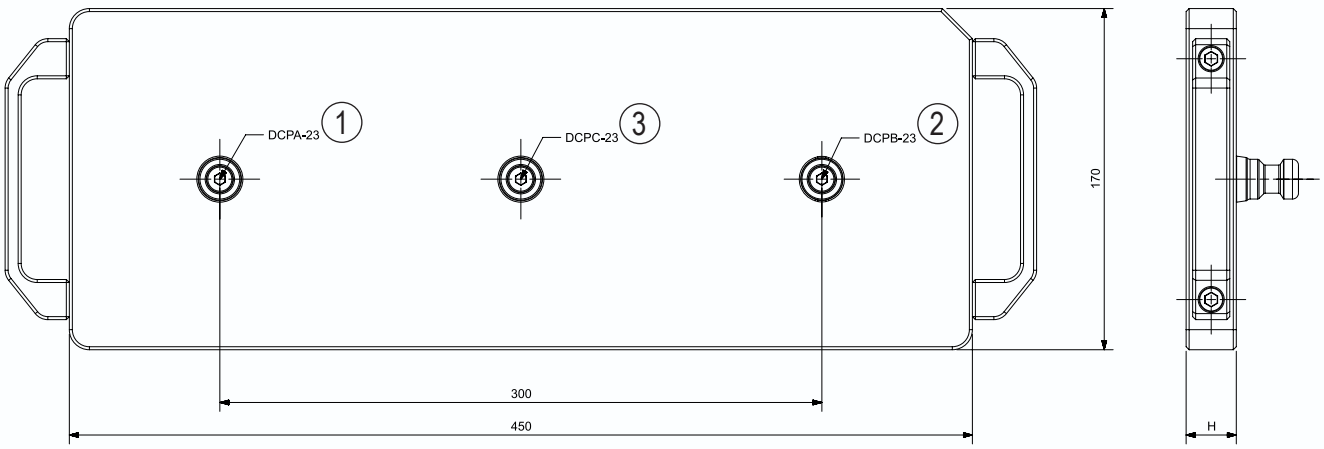

TPC23 - 88 - T4 快速更换托盘模块 / Quick-change Pallet Module

型号 Description	编号 ID	材料 Material	平面平行度 Plane parallelism [mm]	高度 H Height H [mm]	重量 Weight [kg]
TPC 23 - 88 - T2A	10441-A	铝 | Aluminum	0.05	25	9
TPC 23 - 88 - T2S	10441-S	钢 | Steel	0.02	20	20.5

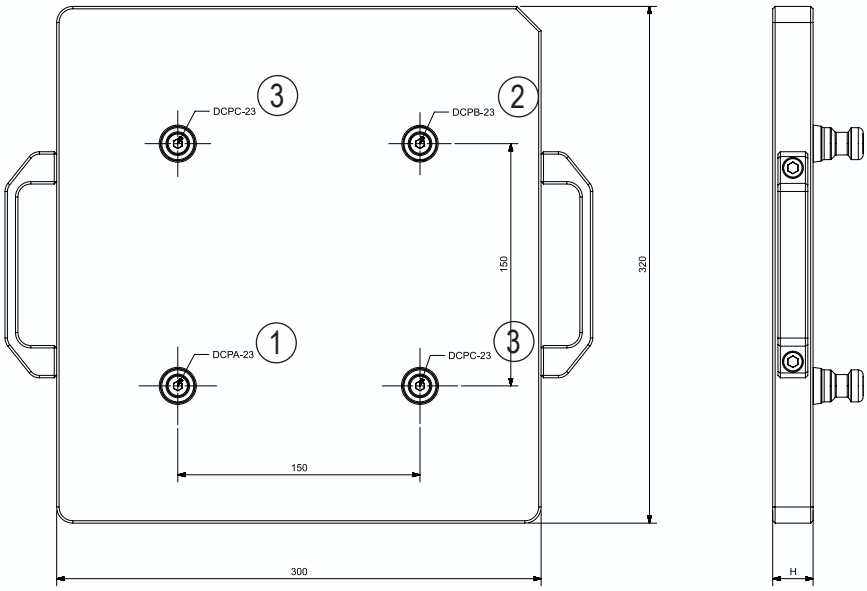

1 A 型定位拉钉 /Type A Centering pin 2 B 型补偿拉钉 / Type A Positioning pin 3 C 型锁紧拉钉 / Type C Clamping pin 4 圆柱销钉 / Cylindrical dowels

TPC23 - 88 - T6 快速更换托盘模块 / Quick-change Pallet Module

型号 Description	编号 ID	材料 Material	平面平行度 Plane parallelism [mm]	高度 H Height H [mm]	重量 Weight [kg]
TPC 23 - 88 - T6A	10451-A	铝 | Aluminum	0.05	25	12.5
TPC 23 - 88 - T6S	10451-S	钢 | Steel	0.02	20	25.5

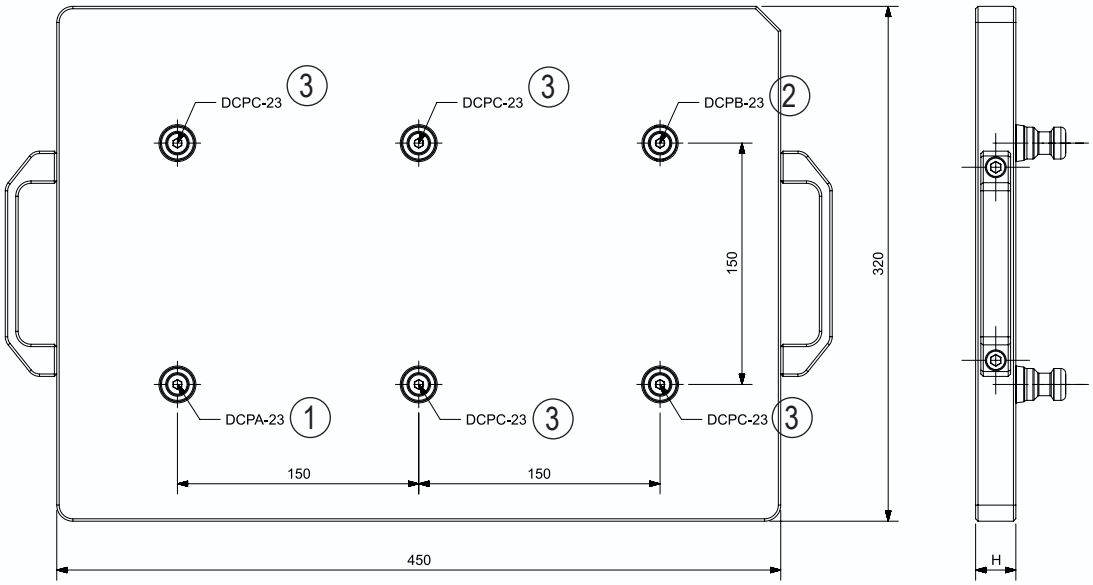

DCP - 23 夹紧拉钉 / Clamping Pins

型号 Description	编号 ID	材料 Material	保持力 Holding force M8 [kN]	保持力 Holding force M10 [kN]	保持力 Holding force M12 [kN]	功能 Version	重量 Weight [kg]
DCPA - 23	10601	不锈钢 |Stainless steel	22.5			定位拉钉 | Positioning pin	0.15
DCPB - 23	10602	不锈钢 |Stainless steel	22.5			定向拉钉 | directional pin	0.15
DCPC - 23	10603	不锈钢 |Stainless steel	22.5			夹紧拉钉 | Clamping pin	0.15

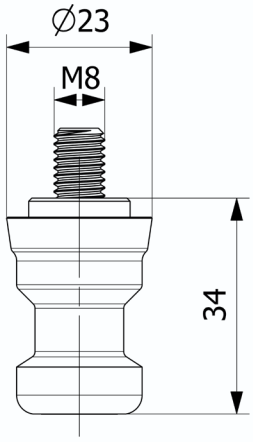

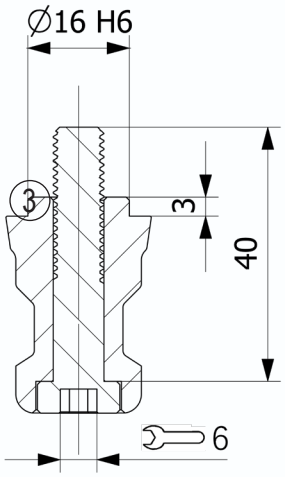

1 A 型定位拉钉 /Type A Centering pin 2 B 型补偿拉钉 / Type A Positioning pin 3 C 型锁紧拉钉 / Type C Clamping pin 4 圆柱销钉 / Cylindrical dowels

SIMPLE - KSZ - 90

快速更换托盘系统 | Quick-change Pallet Systems

KSZ - 90

快速更换托盘模块 / **Quick-change Pallet Module**

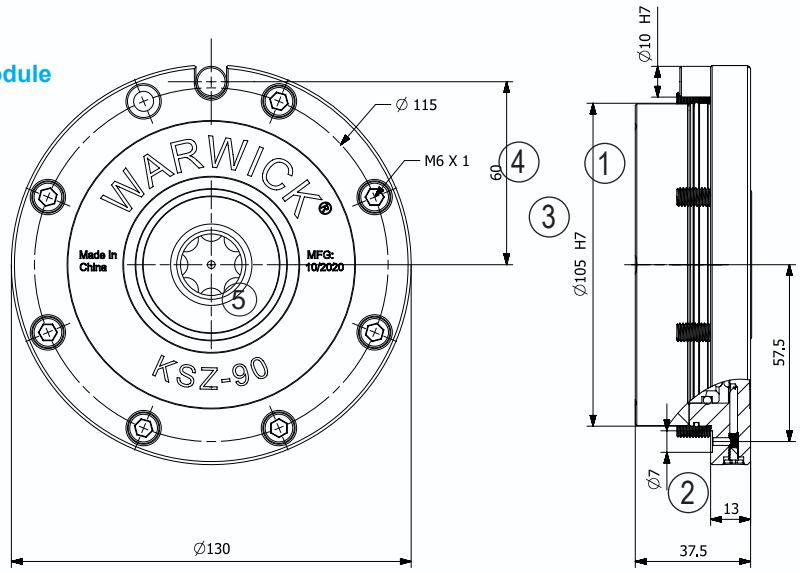

KSZ - 90 - T1

单头夹紧站 / **1-way Clamping Station**

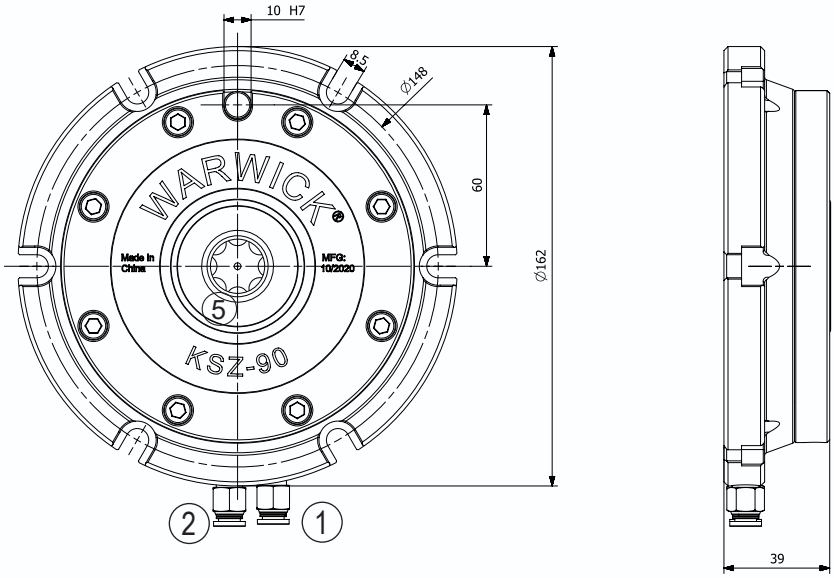

KSZ - 90 - T2

双头夹紧站 / **2-way Clamping Station**

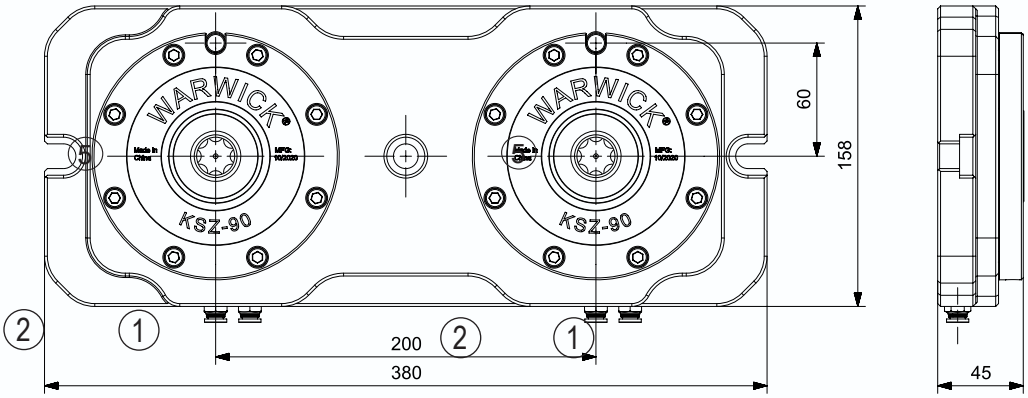

1 进气解除锁紧 /The intake air is unlocked
2 进气增加夹紧力 /The intake air increases the clamping force
3 安装定位尺寸 / Installation position size
4 固定锁紧螺丝 /Fixed lock screw
5 清洁气孔 /Clean stomata

KSZ - 90 - T3

三头夹紧站 / 3-way Clamping Station

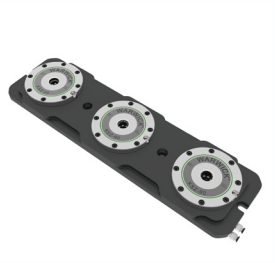

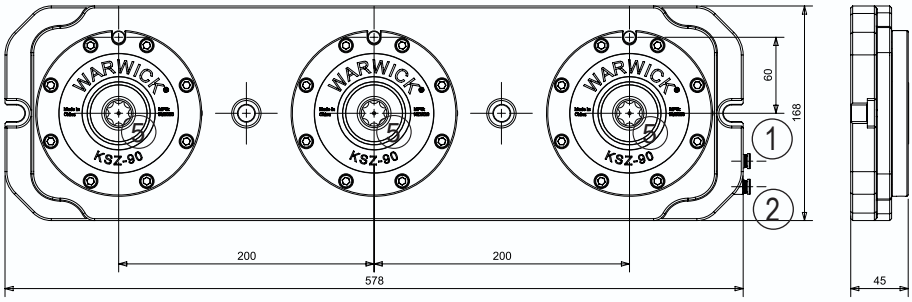

KSZ - 90 - T4

四头夹紧站 / 4-way Clamping Station

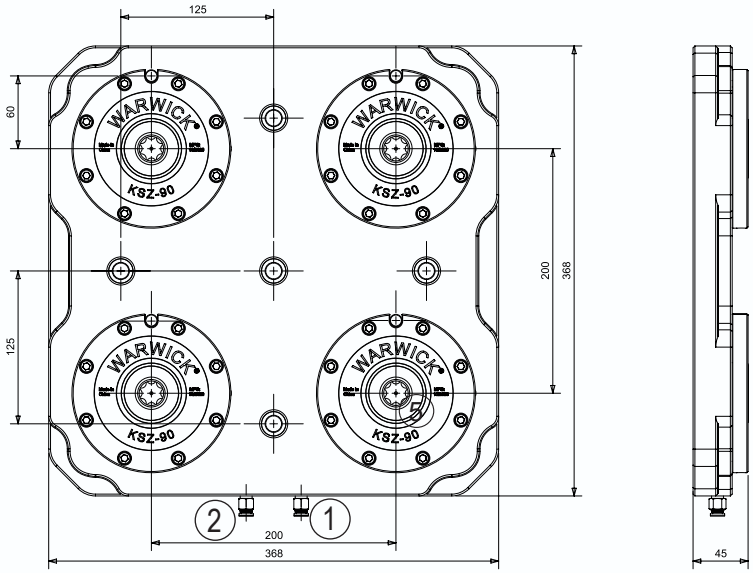

KSZ - 90 - T6

六头夹紧站 / 6-way Clamping Station

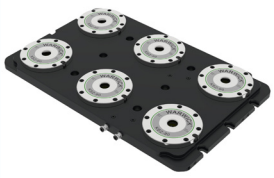

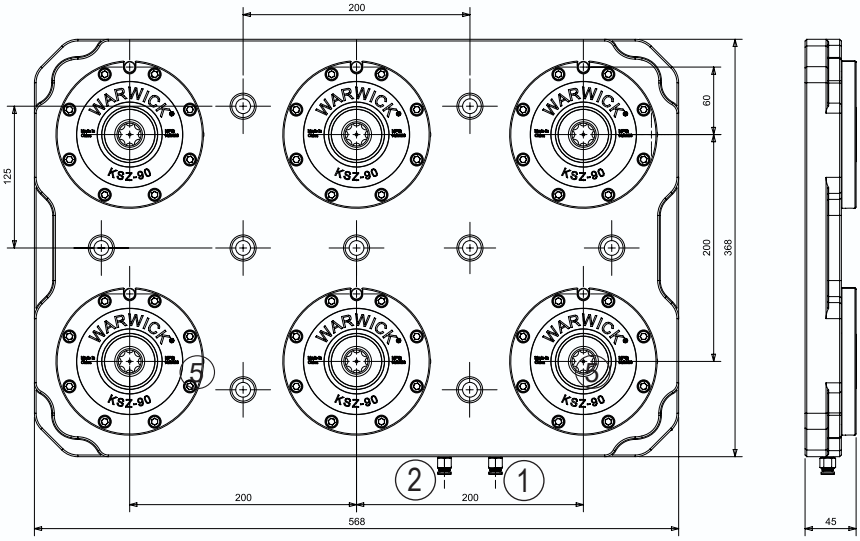

1 进气解除锁紧 /The intake air is unlocked
2 进气增加夹紧力 /The intake air increases the clamping force
3 安装定位尺寸 / Installation position size
4 固定锁紧螺丝 /Fixed lock screw
5 清洁气孔 /Clean stomata

技术数据 | Technical data

型号 Description	编号 ID	中心距离 Center distance [mm]	重复精度 Repeat accuracy [mm]	打开锁紧时间 Closing/opening time [S]	6.8 bar 锁紧力 6.8 bar clamping force [kN]	弹簧锁紧力 Spring locking force [kN]	工作气压 Operating pressure [bar]	库存 Stock	重量 Weight [kg]
KSZ90	10000	-	0.005	0.6	14	5.5	5.5-9	●	2.7
KSZ90-T1	10010	-	0.005	0.6	14	5.5	5.5 - 9	●	6.5
KSZ90-T2	10020	200	0.005	0.6	2 X 14	2 X 5.5	5.5 - 9	●	15.2
KSZ90-T3	10030	200	0.005	0.6	3 X 14	3 X 5.5	5.5 - 9	●	28.5
KSZ90-T4	10040	200	0.005	0.6	4 X 14	4 X 5.5	5.5 - 9	●	49
KSZ90-T6	10050	200	0.005	0.6	6 X 14	6 X 5.5	5.5 - 9	●	68

• 有关上述设备版本的详细说明，请参见第 A3 页和第 A4 页。
• 从第 B 页开始，匹配系统和顶钳口。

供货范围

夹紧站，包括 SIMPLE-KSZ 88 模块，操作手册；
不包含夹紧拉钉或分度销

6.8 bar 夹紧力

同时使用 6.8bar 压力和弹簧组件产生夹紧力，该压力由传感器测量。

弹簧组件的夹紧力

仅使用弹簧组件产生夹紧力，该压力由传感器测量。

• See pages B3 and B4 for detailed descriptions of the above device versions.
• From page B, match the system and top jaws.

Scope of delivery

Clamping table, including SIMPLE-KSZ 88 module, operating manual;
no clamping pins or indexing pins

6.8 bar clamping force

A clamping force is generated simultaneously using a 6.8 bar pressure and a spring assembly, which is measured by a sensor.

The clamping force of the spring assembly

Only a spring assembly is used to generate a clamping force, which is measured by a sensor.

TPC23 - 90 - T1 快速更换托盘模块 / Quick-change Pallet Module

型号 Description	编号 ID	材料 Material	平面平行度 Plane parallelism [mm]	高度 H Height H [mm]	重量 Weight [kg]
TPC 23 - 90 - T1A	10400-A	铝 | Aluminum	0.05	25	2.5
TPC 23 - 90 - T1S	10400-S	钢 | Steel	0.02	20	5.5

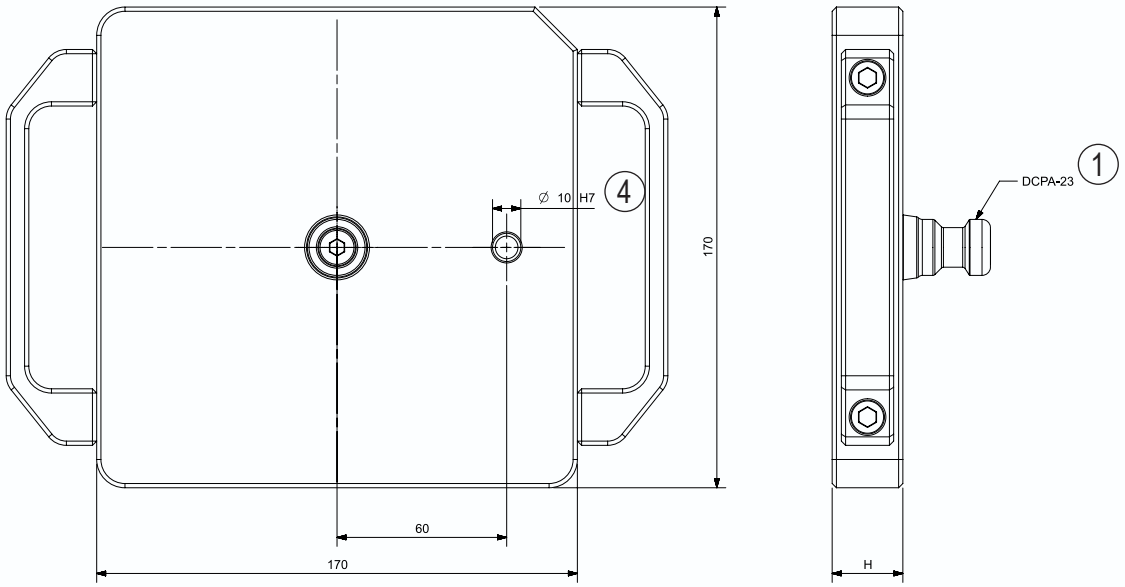

TPC23 - 90 - T2 快速更换托盘模块 / Quick-change Pallet Module

型号 Description	编号 ID	材料 Material	平面平行度 Plane parallelism [mm]	高度 H Height H [mm]	重量 Weight [kg]
TPC 23 - 90 - T2A	10420-A	铝 | Aluminum	0.05	25	6.5
TPC 23 - 90 - T2S	10420-S	钢 | Steel	0.02	20	13.5

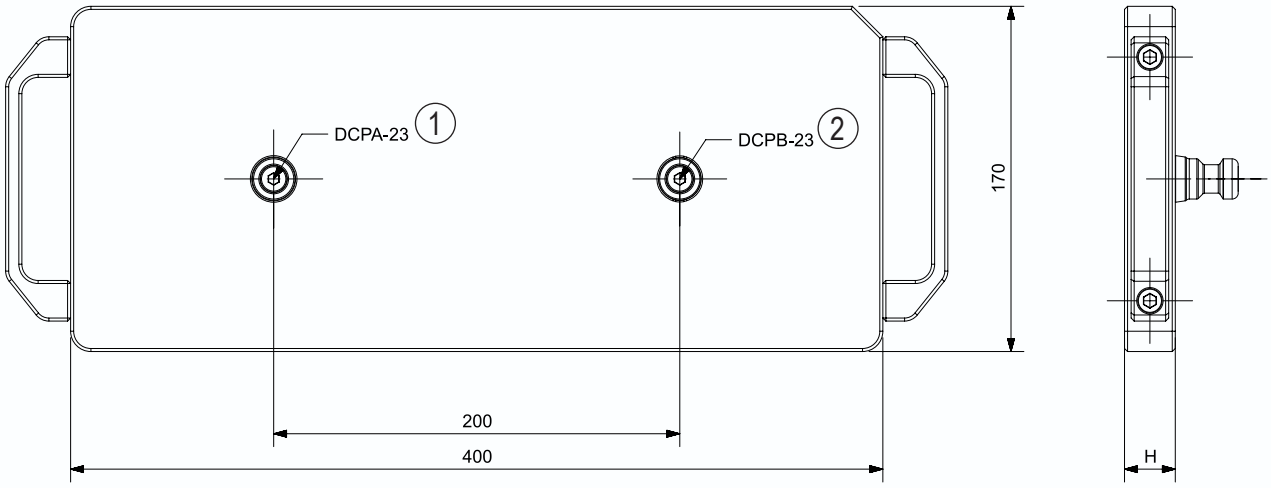

1 A 型定位拉钉 /Type A Centering pin 2 B 型补偿拉钉 / Type A Positioning pin 3 C 型锁紧拉钉 / Type C Clamping pin 4 圆柱销钉 / Cylindrical dowels

TPC23 - 90 - T3 快速更换托盘模块 / Quick-change Pallet Module

型号 Description	编号 ID	材料 Material	平面平行度 Plane parallelism [mm]	高度 H Height H [mm]	重量 Weight [kg]
TPC 23 - 90 - T3A	10430-A	铝 | Aluminum	0.05	25	12.5
TPC 23 - 90 - T3S	10430-S	钢 | Steel	0.02	20	24.5

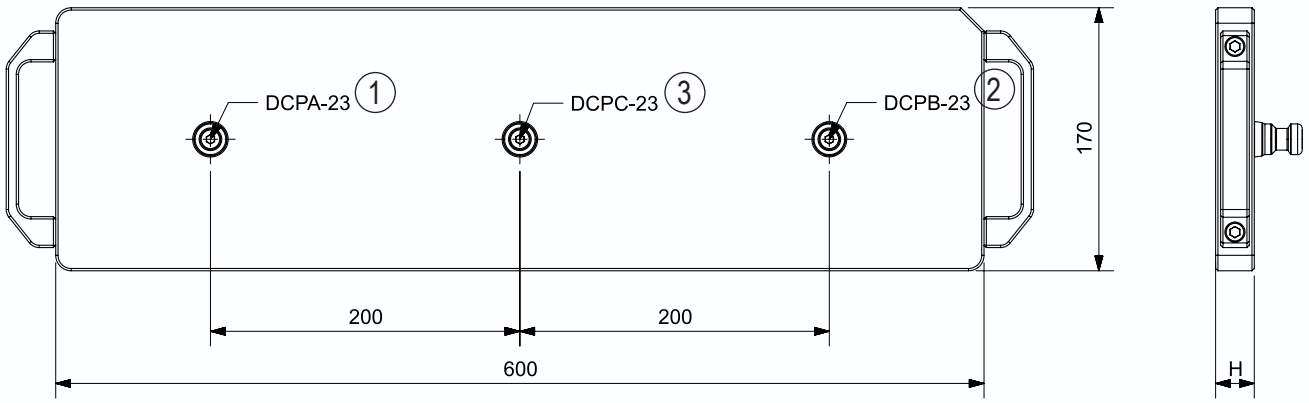

TPC23 - 90 - T4 快速更换托盘模块 / Quick-change Pallet Module

型号 Description	编号 ID	材料 Material	平面平行度 Plane parallelism [mm]	高度 H Height H [mm]	重量 Weight [kg]
TPC 23 - 90 - T4A	10420-A	铝 | Aluminum	0.05	25	16.5
TPC 23 - 90 - T4S	10420-S	钢 | Steel	0.02	20	29.5

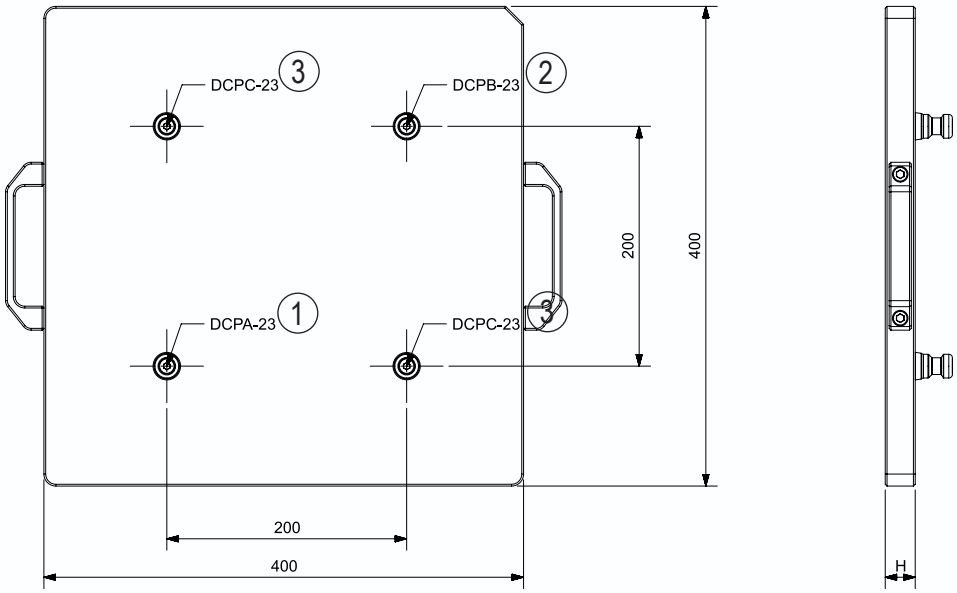

1 A 型定位拉钉 /Type A Centering pin 2 B 型补偿拉钉 / Type A Positioning pin 3 C 型锁紧拉钉 / Type C Clamping pin 4 圆柱销钉 / Cylindrical dowels

TPC23 - 90 - T6 快速更换托盘模块 / Quick-change Pallet Module

型号 Description	编号 ID	材料 Material	平面平行度 Plane parallelism [mm]	高度 H Height H [mm]	重量 Weight [kg]
TPC 23 - 90 - T6A	10450-A	铝 | Aluminum	0.05	25	30.3
TPC 23 - 90 - T6S	10450-S	钢 | Steel	0.02	20	48.6

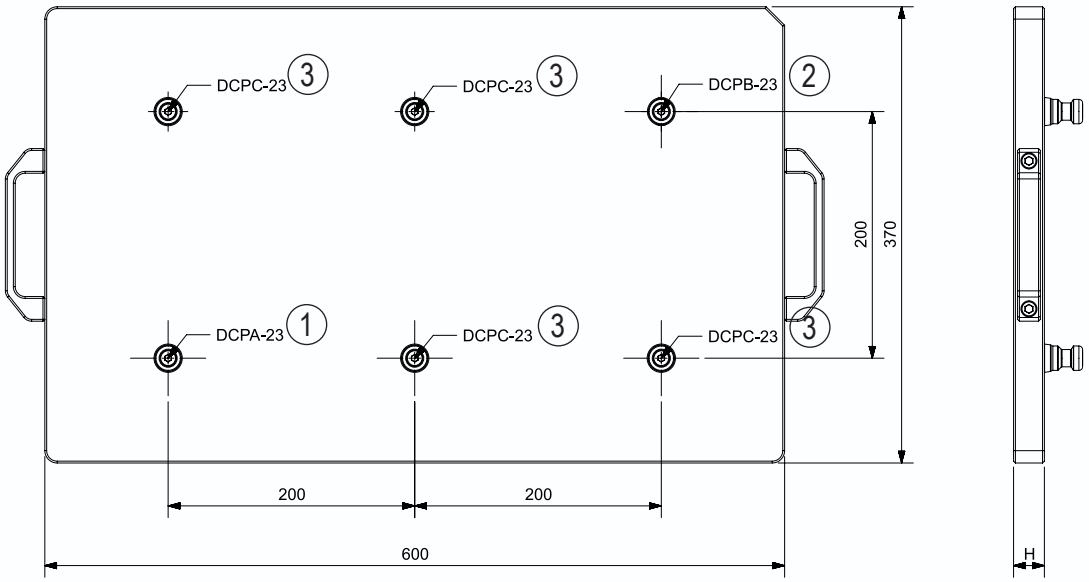

DCP - 23 夹紧拉钉 / Clamping Pins

型号 Description	编号 ID	材料 Material	保持力 Holding force M8 [kN]	保持力 Holding force M10 [kN]	保持力 Holding force M12 [kN]	功能 Version	重量 Weight [kg]
DCPA - 23	10601	不锈钢 |Stainless steel	22.5			定位拉钉 | Positioning pin	0.15
DCPB - 23	10602	不锈钢 |Stainless steel	22.5			定向拉钉 | directional pin	0.15
DCPC - 23	10603	不锈钢 |Stainless steel	22.5			夹紧拉钉 | Clamping pin	0.15

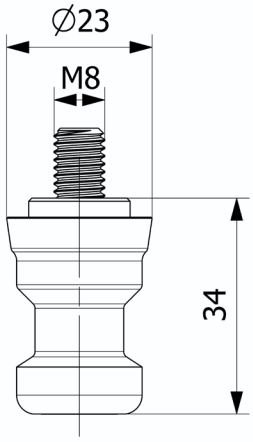

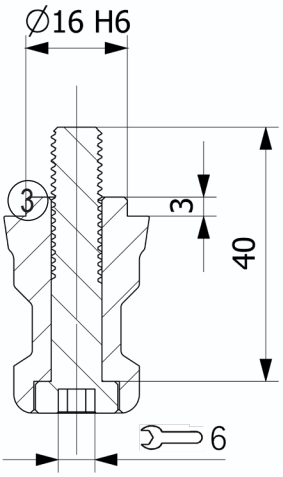

(1) A 型定位拉钉 /Type A Centering pin (2) B 型补偿拉钉 / Type A Positioning pin (3) C 型锁紧拉钉 / Type C Clamping pin (4) 圆柱销钉 / Cylindrical dowels

SIMPLE - KSZ - 115

快速更换托盘系统 | Quick-change Pallet Systems

KSZ - 115

快速更换托盘模块 / **Quick-change Pallet Module**

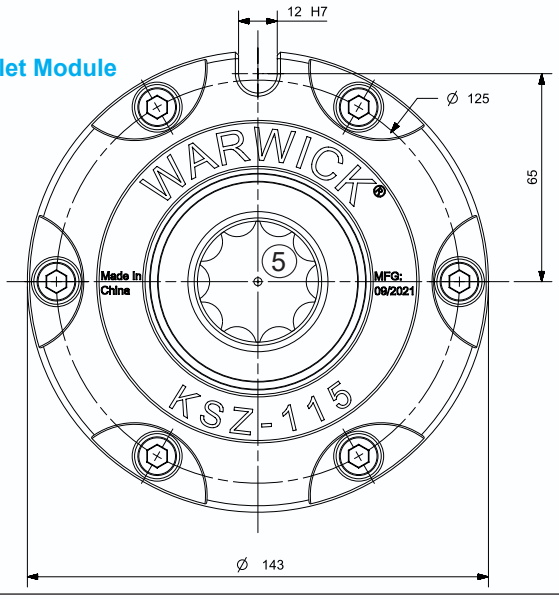

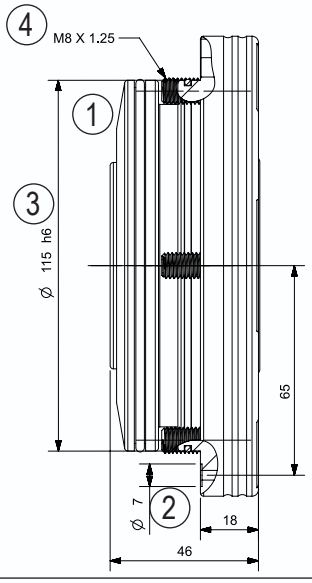

KSZ - 115 - T1

单头夹紧站 / **1-way Clamping Station**

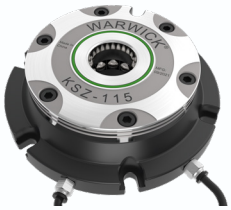

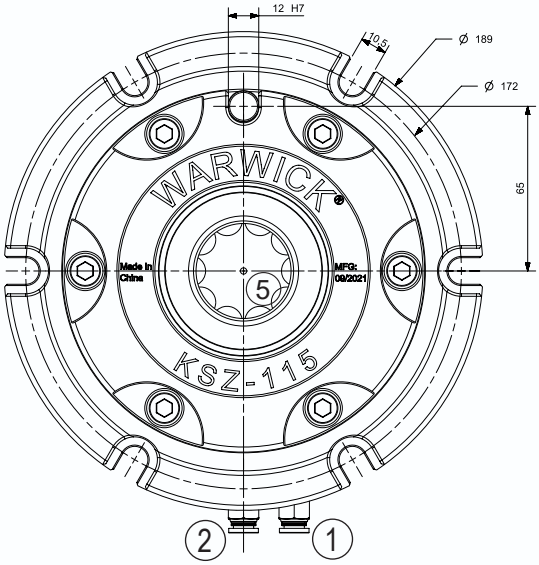

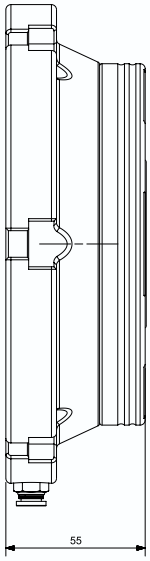

KSZ - 115 - T2

双头夹紧站 / **2-way Clamping Station**

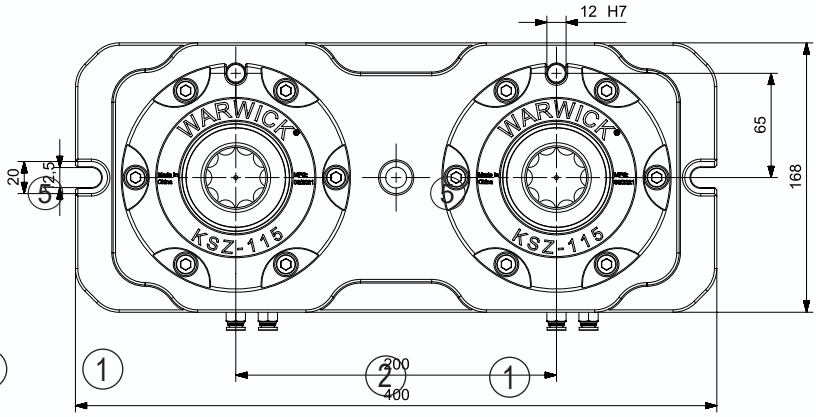

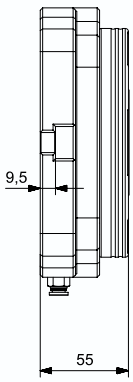

1 进气解除锁紧 /The intake air is unlocked
2 进气增加夹紧力 /The intake air increases the clamping force
3 安装定位尺寸 / Installation position size
4 固定锁紧螺丝 /Fixed lock screw
5 清洁气孔 /Clean stomata

KSZ - 115 - T3

三头夹紧站 / 3-way Clamping Station

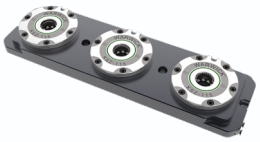

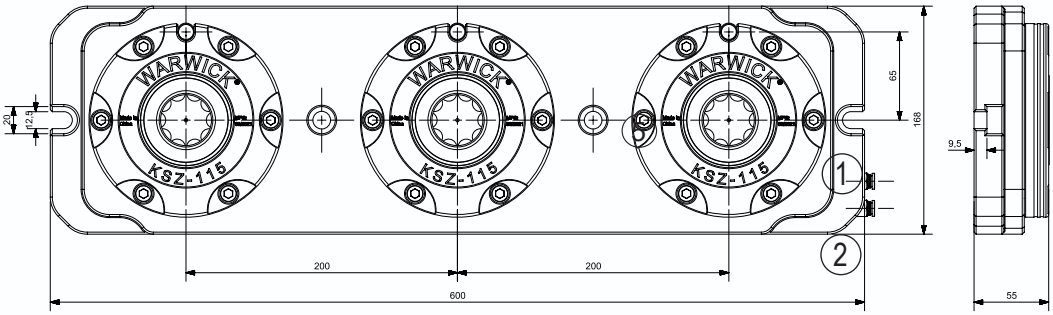

KSZ - 115 - T4

四头夹紧站 / 4-way Clamping Station

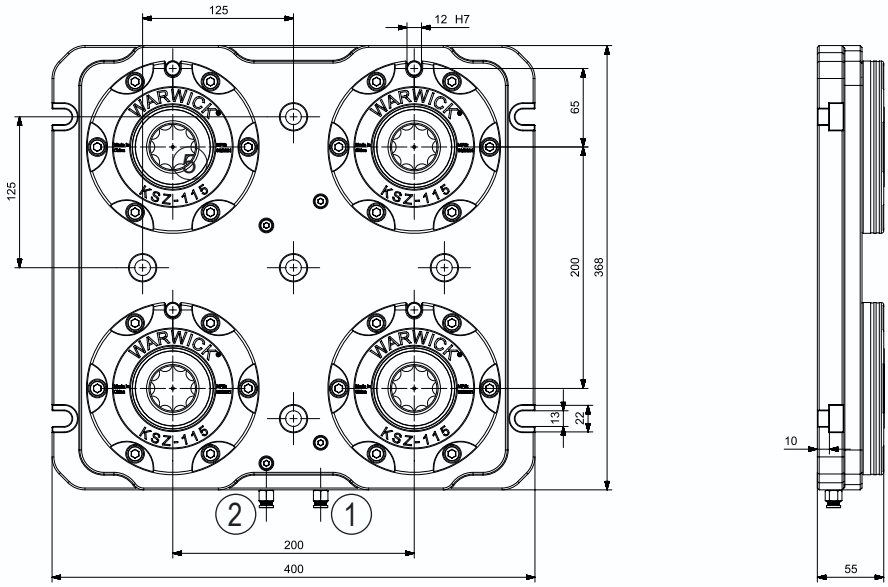

KSZ - 115 - T6

六头夹紧站 / 6-way Clamping Station

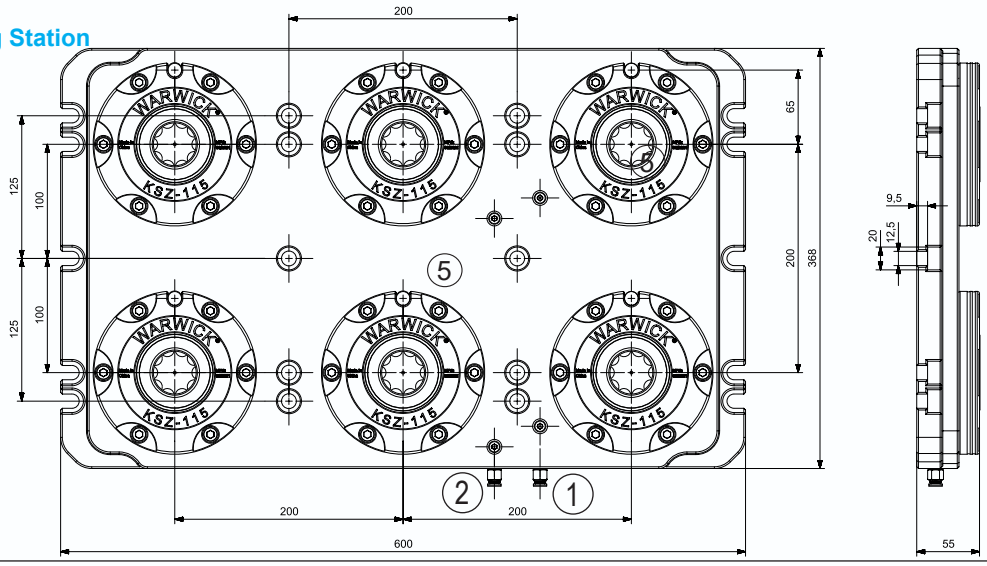

1 进气解除锁紧 /The intake air is unlocked
2 进气增加夹紧力 /The intake air increases the clamping force
3 安装定位尺寸 / Installation position size
4 固定锁紧螺丝 /Fixed lock screw
5 清洁气孔 /Clean stomata

技术数据 | Technical data

型号 Description	编号 ID	中心距离 Center distance [mm]	重复精度 Repeat accuracy [mm]	打开锁紧时间 Closing/opening time [S]	6.8 bar 锁紧力 6.8 bar clamping force [kN]	弹簧锁紧力 Spring locking force [kN]	工作气压 Operating pressure [bar]	库存 Stock	重量 Weight [kg]
KSZ115	11000	-	0.005	0.6	21	6	5.5-9	●	4.2
KSZ115-T1	11010	-	0.005	0.6	21	6	5.5 - 9	●	8.5
KSZ115-T2	11020	200	0.005	0.6	2 X 21	2 X 6	5.5 - 9	●	25
KSZ115-T3	11030	200	0.005	0.6	3 X 21	3 X 6	5.5 - 9	●	41
KSZ115-T4	11040	200	0.005	0.6	4 X 21	4 X 6	5.5 - 9	●	56
KSZ115-T6	11050	200	0.005	0.6	6 X 21	6 X 6	5.5 - 9	●	79

• 有关上述设备版本的详细说明，请参见第 A3 页和第 A4 页。
• 从第 B 页开始，匹配系统和顶钳口。

供货范围

夹紧站，包括 SIMPLE-KSZ 88 模块，操作手册；
不包含夹紧拉钉或分度销

6.8 bar 夹紧力

同时使用 6.8bar 压力和弹簧组件产生夹紧力，该压力由传感器测量。

弹簧组件的夹紧力

仅使用弹簧组件产生夹紧力，该压力由传感器测量。

• See pages B3 and B4 for detailed descriptions of the above device versions.
• From page B, match the system and top jaws.

Scope of delivery

Clamping table, including SIMPLE-KSZ 88 module, operating manual;
no clamping pins or indexing pins

6.8 bar clamping force

A clamping force is generated simultaneously using a 6.8 bar pressure and a spring assembly, which is measured by a sensor.

The clamping force of the spring assembly

Only a spring assembly is used to generate a clamping force, which is measured by a sensor.

TPC40 - 115 - T1 快速更换托盘模块 / Quick-change Pallet Module

型号 Description	编号 ID	材料 Material	平面平行度 Plane parallelism [mm]	高度 H Height H [mm]	重量 Weight [kg]
TPC 40 - 115 - T1A	11200-A	铝 | Aluminum	0.05	25	3
TPC 40 - 115 - T1S	11200-S	钢 | Steel	0.02	20	6

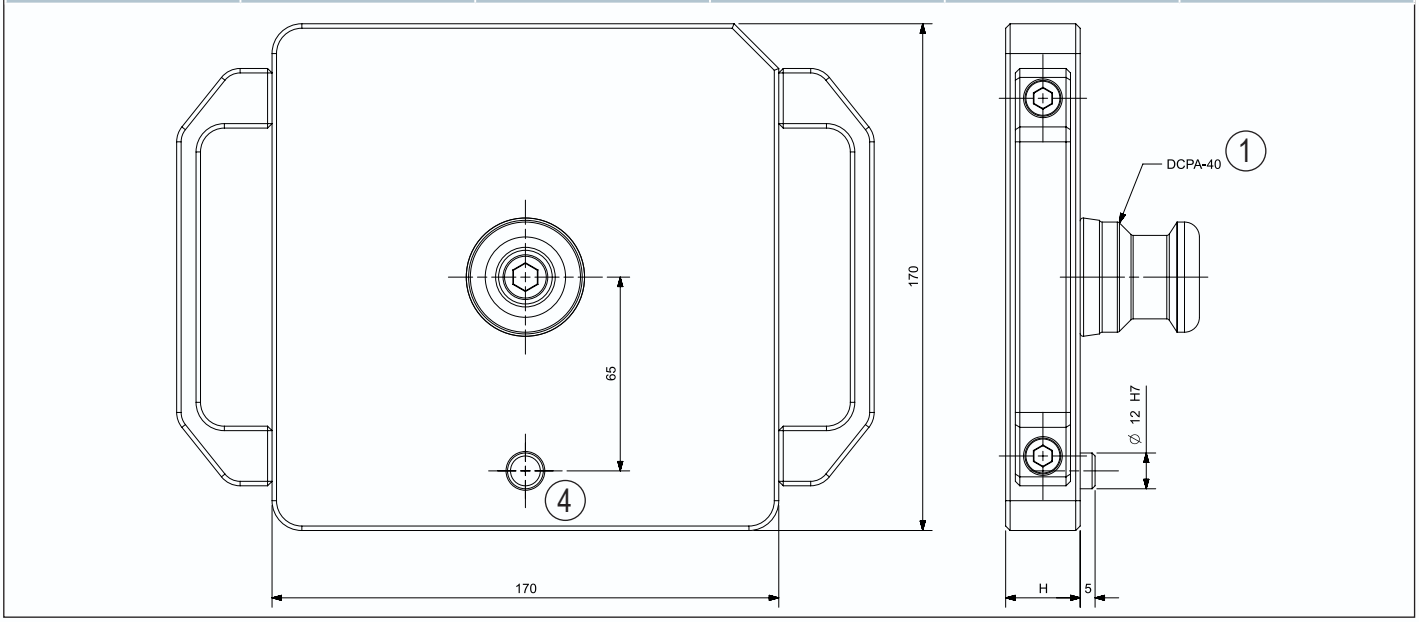

TPC40 - 115 - T2 快速更换托盘模块 / Quick-change Pallet Module

型号 Description	编号 ID	材料 Material	平面平行度 Plane parallelism [mm]	高度 H Height H [mm]	重量 Weight [kg]
TPC 40 - 115 - T2A	11210-A	铝 | Aluminum	0.05	25	6.8
TPC 40 - 115 - T2S	11210-S	钢 | Steel	0.02	20	13.5

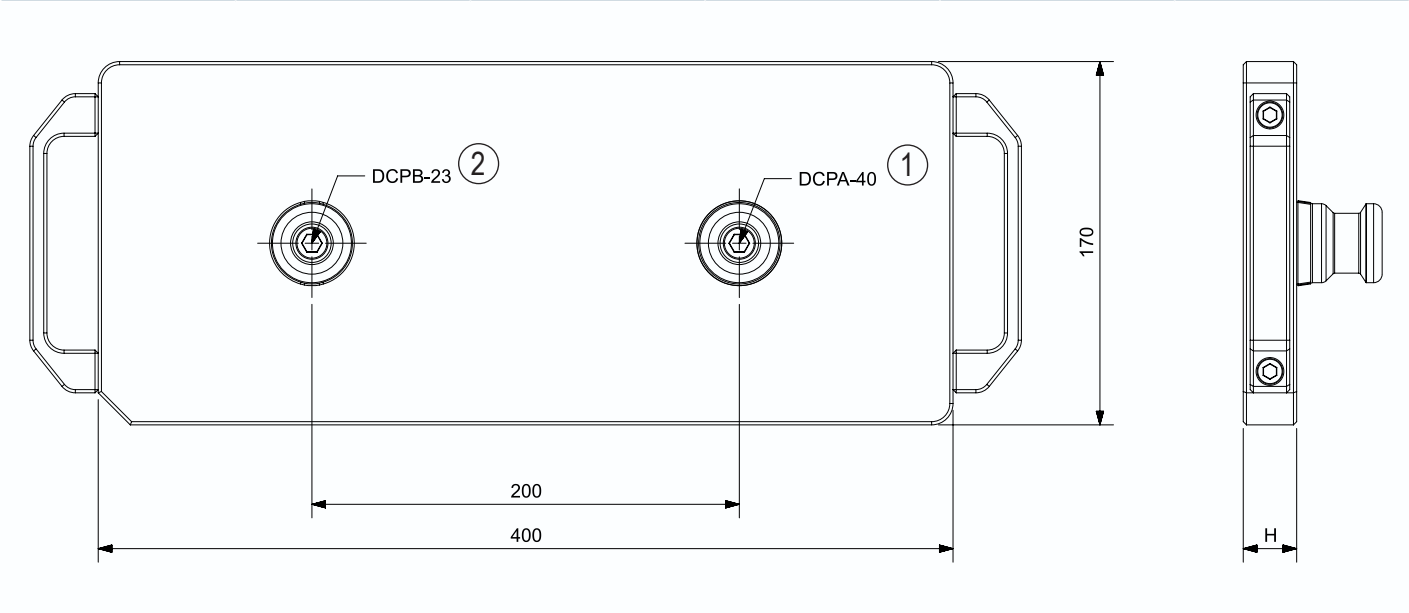

1 A 型定位拉钉 /Type A Centering pin 2 B 型补偿拉钉 / Type A Positioning pin 3 C 型锁紧拉钉 / Type C Clamping pin 4 圆柱销钉 / Cylindrical dowels

TPC40 - 115 快速更换托盘模块 / Quick-change Pallet Module

型号 Description	编号 ID	材料 Material	平面平行度 Plane parallelism [mm]	高度 H Height H [mm]	重量 Weight [kg]
TPC 40 - 115 - T3A	11220-A	铝 | Aluminum	0.05	25	9.5
TPC 40 - 115 - T3S	11220-S	钢 | Steel	0.02	20	18.5

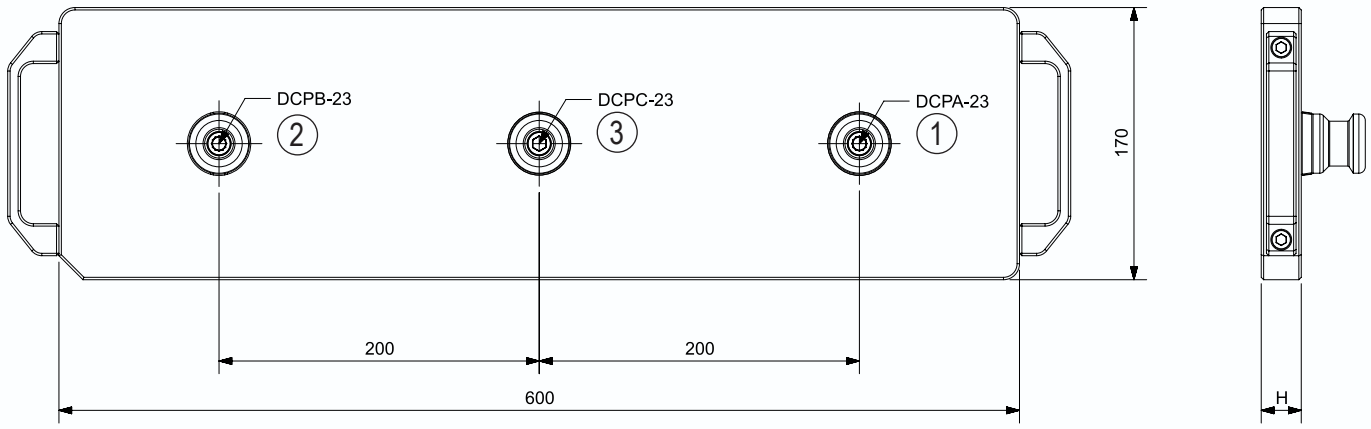

TPC40 - 115 - T4 快速更换托盘模块 / Quick-change Pallet Module

型号 Description	编号 ID	材料 Material	平面平行度 Plane parallelism [mm]	高度 H Height H [mm]	重量 Weight [kg]
TPC 40 - 115 - T4A	11230-A	铝 | Aluminum	0.05	25	13.5
TPC 40 - 115 - T4S	11230-S	钢 | Steel	0.02	20	26.5

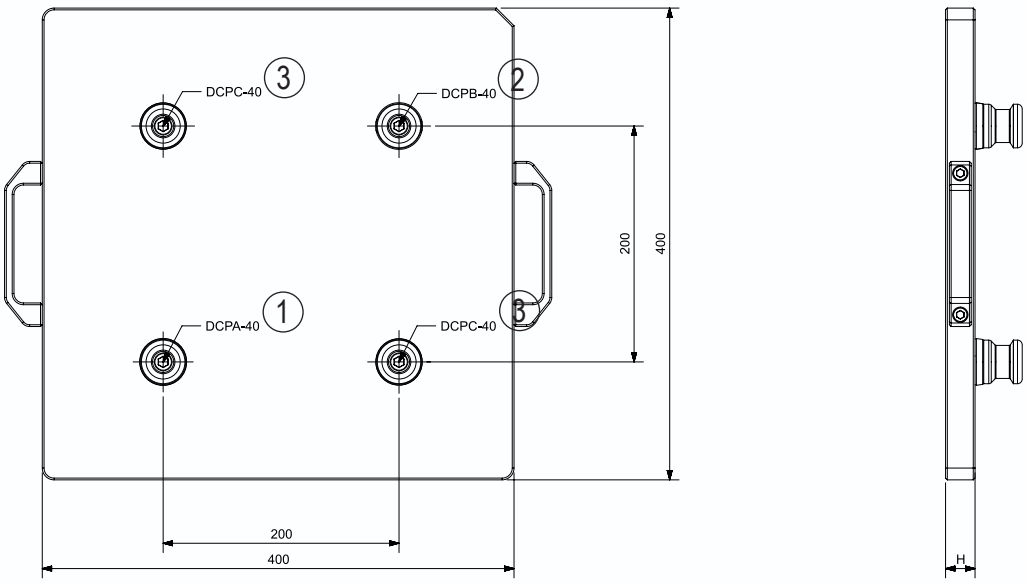

1 A 型定位拉钉 /Type A Centering pin 2 B 型补偿拉钉 / Type A Positioning pin 3 C 型锁紧拉钉 / Type C Clamping pin 4 圆柱销钉 / Cylindrical dowels

TPC23 - 90 - T6 快速更换托盘模块 / Quick-change Pallet Module

型号 Description	编号 ID	材料 Material	平面平行度 Plane parallelism [mm]	高度 H Height H [mm]	重量 Weight [kg]
TPC 40 - 115 - T6A	11240-A	铝 | Aluminum	0.05	25	30.3
TPC 40 - 115 - T6S	11240-S	钢 | Steel	0.02	20	52.2

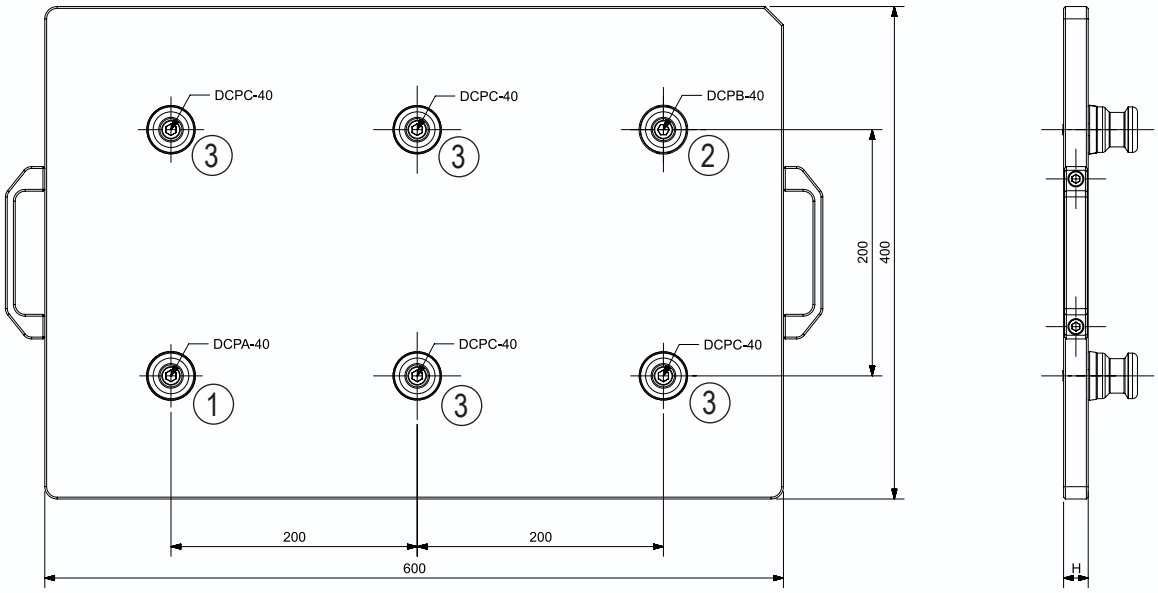

DCP - 23 夹紧拉钉 / Clamping Pins

型号 Description	编号 ID	材料 Material	保持力 Holding force M8 [kN]	保持力 Holding force M10 [kN]	保持力 Holding force M12 [kN]	功能 Version	重量 Weight [kg]
DCPA - 40	10611	不锈钢 |Stainless steel	22.5			定位拉钉 | Centering pin	0.3
DCPB - 40	10612	不锈钢 |Stainless steel	22.5			定向拉钉 | Positioning pin	0.3
DCPC - 40	10613	不锈钢 |Stainless steel	22.5			夹紧拉钉 | Clamping pin	0.3

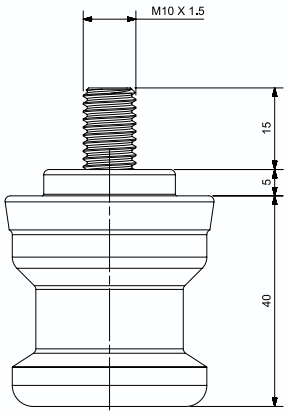

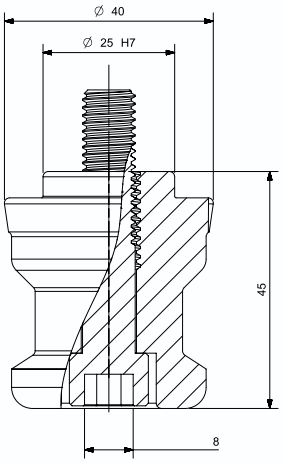

(1) A 型定位拉钉 /Type A Centering pin (2) B 型补偿拉钉 / Type A Positioning pin (3) C 型锁紧拉钉 / Type C Clamping pin (4) 圆柱销钉 / Cylindrical dowels

SIMPLE - KSZ90-T2-LS

快速更换托盘系统 | Quick-change Pallet Systems

LS 快速更换托盘系统 / Quick-change Pallet Systems

型号 Description	编号 ID	中心距离 Center distance [mm]	重复精度 Repeat accuracy [mm]	打开锁紧时间 Closing/opening time [S]	0.68 bar 锁紧力 0.68 bar clamping force [kN]	弹簧锁紧力 Spring locking force [kN]	工作气压 Operating pressure [bar]	库存 Stock	重量 Weight [kg]
KSZ90-T2-LS	10021	-	0.005	0.6	2 X 14	2 X 5.5	5.5-9	●	34.5

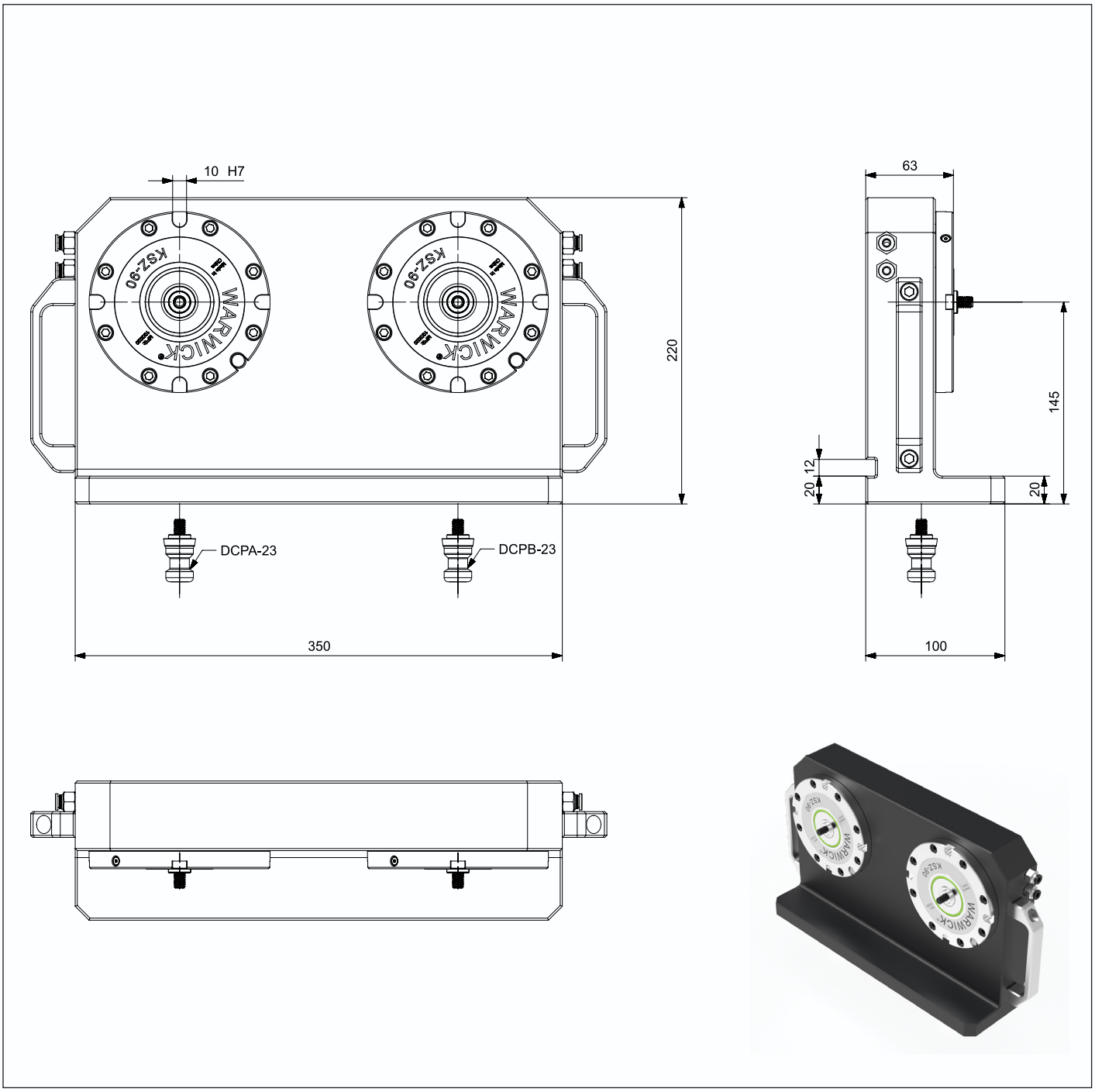

LS 快速更换托盘系统 / Quick-change Pallet Systems

型号 Description	编号 ID	中心距离 Center distance [mm]	重复精度 Repeat accuracy [mm]	打开锁紧时间 Closing/opening time [S]	0.68 bar 锁紧力 0.68 bar clamping force [kN]	弹簧锁紧力 Spring locking force [kN]	工作气压 Operating pressure [bar]	库存 Stock	重量 Weight [kg]
KSZ115-T2-LS	11021	-	0.005	0.6	2 X 21	2 X 6	5.5-9	●	34.5

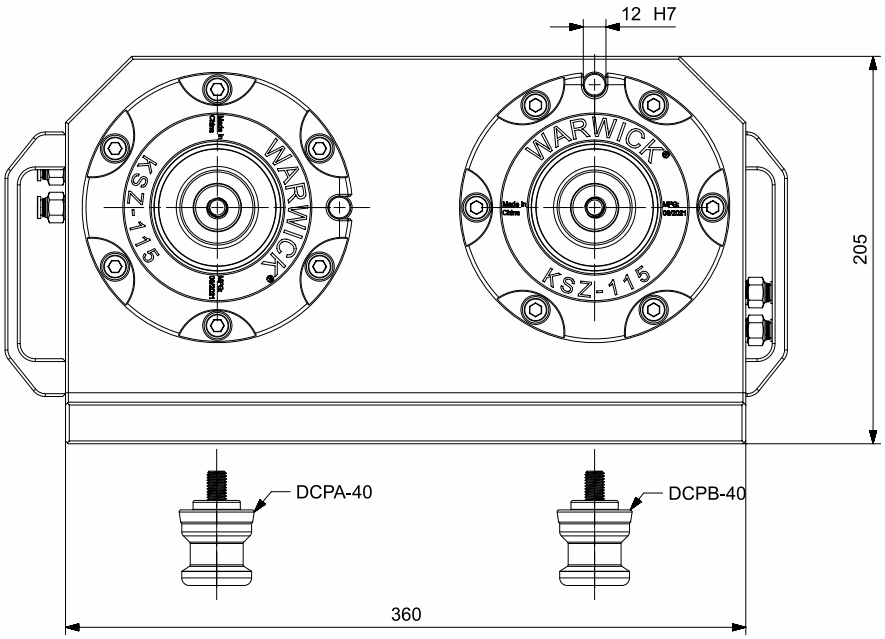

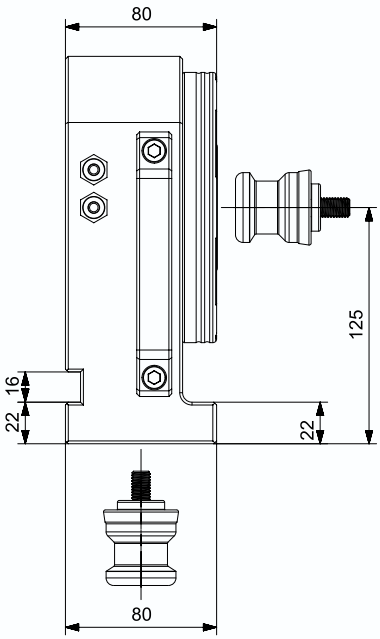

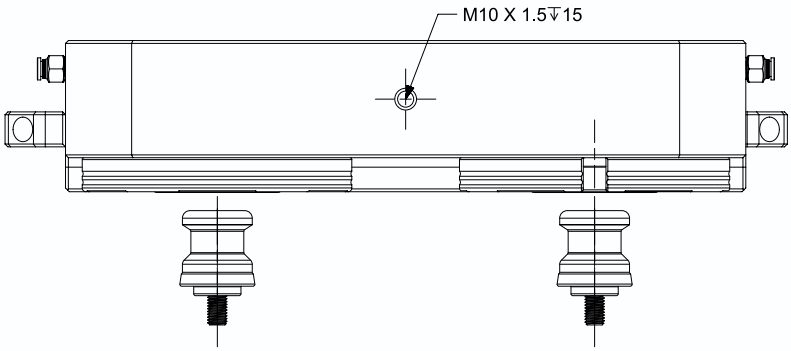

SIMPLE - KSZ90-T1-L

快速更换托盘系统 | Quick-change Pallet Systems

L 快速更换托盘系统 / Quick-change Pallet Systems

型号 Description	编号 ID	中心距离 Center distance [mm]	重复精度 Repeat accuracy [mm]	打开锁紧时间 Closing/opening time [S]	0.68 bar 锁紧力 0.68 bar clamping force [kN]	弹簧锁紧力 Spring locking force [kN]	工作气压 Operating pressure [bar]	库存 Stock	重量 Weight [kg]
KSZ90-T1-L	10030	-	0.005	0.6	14	5.5	5.5-9	●	22.5

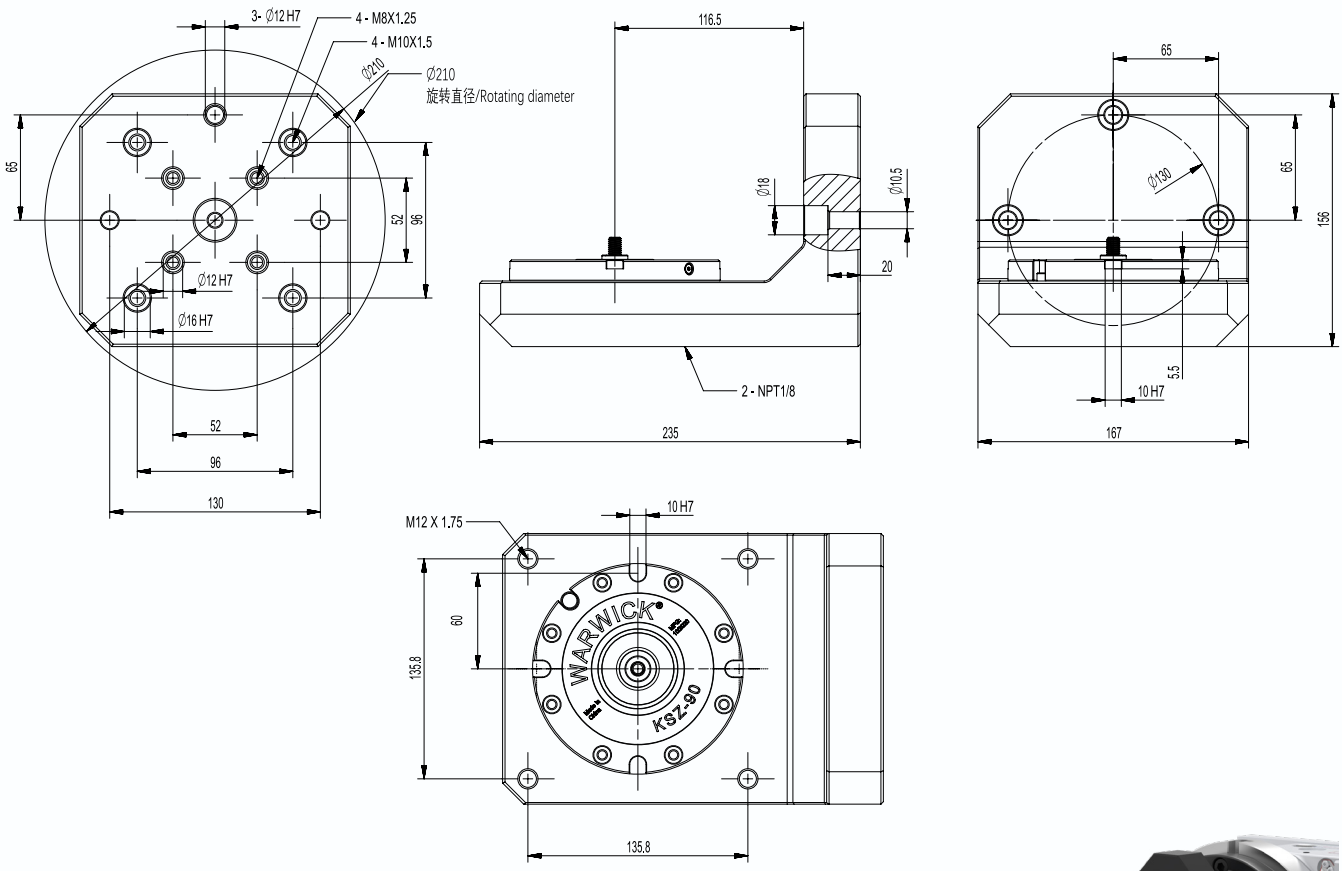

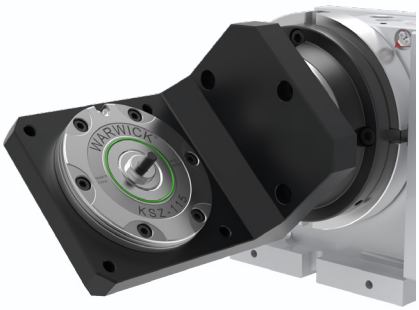

L 快速更换托盘系统 / Quick-change Pallet Systems

型号 Description	编号 ID	中心距离 Center distance [mm]	重复精度 Repeat accuracy [mm]	打开锁紧时间 Closing/opening time [S]	0.68 bar 锁紧力 0.68 bar clamping force [kN]	弹簧锁紧力 Spring locking force [kN]	工作气压 Operating pressure [bar]	库存 Stock	重量 Weight [kg]
KSZ115-T1-L	11032	-	0.005	0.6	21	6	5.5-9	●	24.5

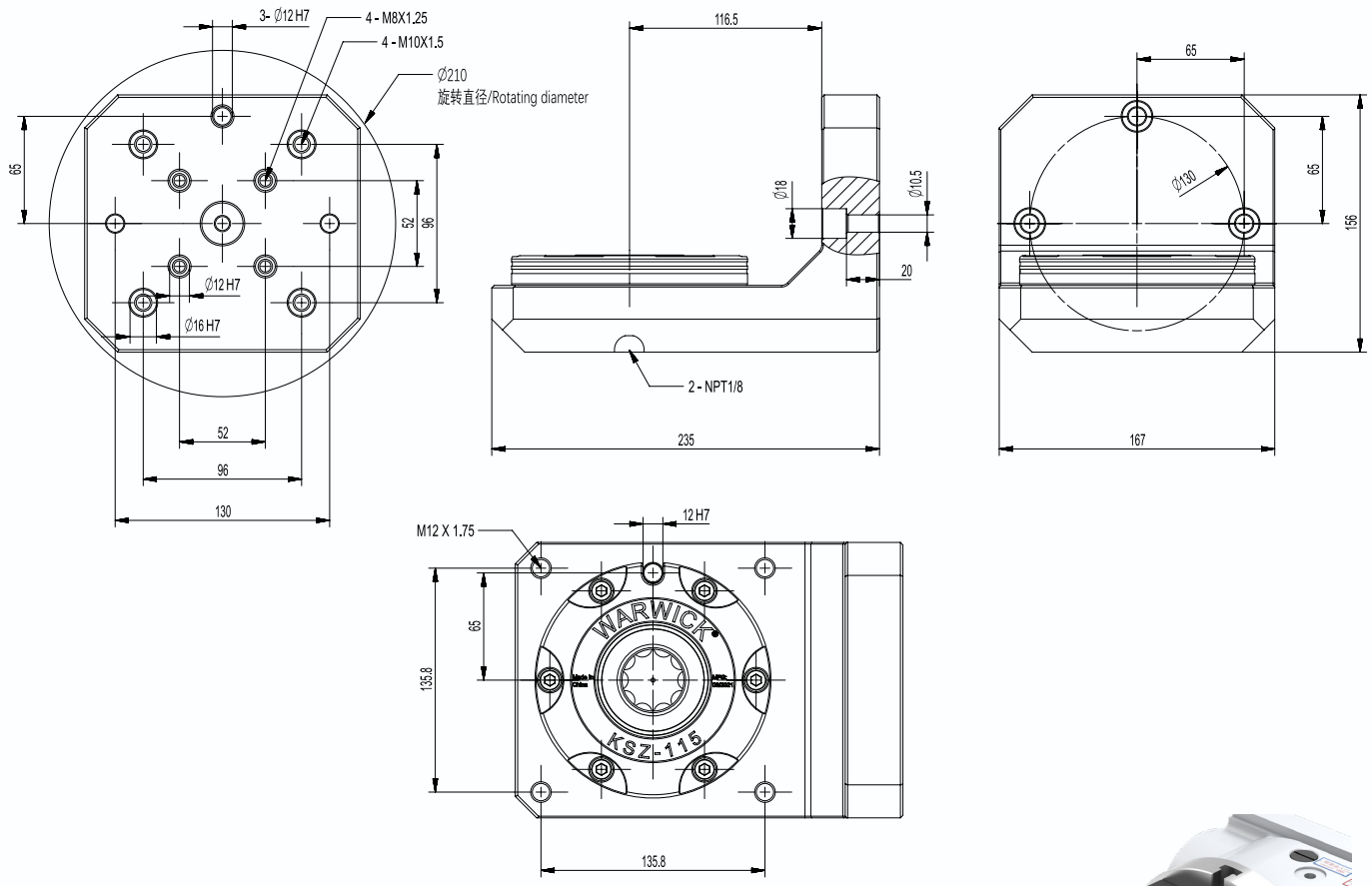

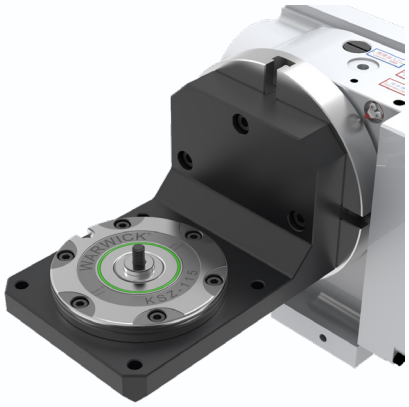

DT 防尘堵头 / Dust-proof plugs

型号 Description	编号 ID	材料 Material	平面平行度 Plane parallelism [mm]	高度 H Height H [mm]	重量 Weight [kg]
DT 23	10605	ABS	-	-	0.1
DT 40	10615	ABS	-	-	0.2

将零点定位的定位圆锥密封起来，起到防尘防水的作用。

The positioning cone of the zero point positioning is sealed to play the role of dust and waterproof.

YB 防尘堵头 / Dust-proof plugs

型号 Description	编号 ID	材料 Material	平面平行度 Plane parallelism [mm]	高度 H Height H [mm]	重量 Weight [kg]
KSZ-YB	10607	45#	-	-	0.7

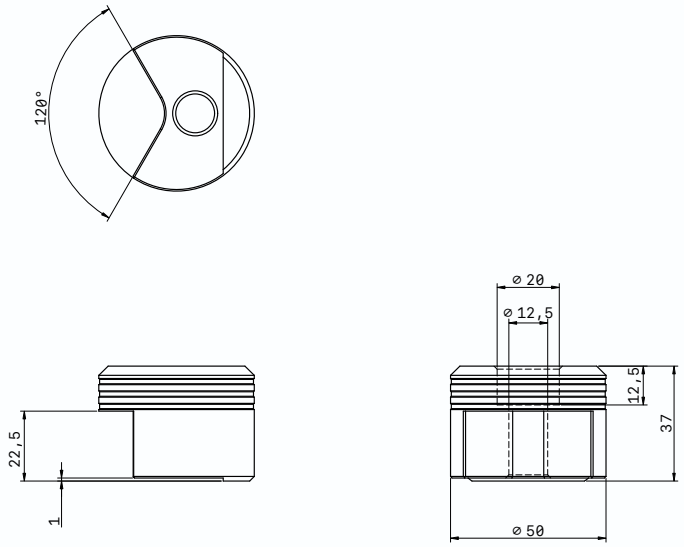

将零点定位的定位圆锥密封起来，起到防尘防水的作用。

The positioning cone of the zero point positioning is sealed to play the role of dust and waterproof.

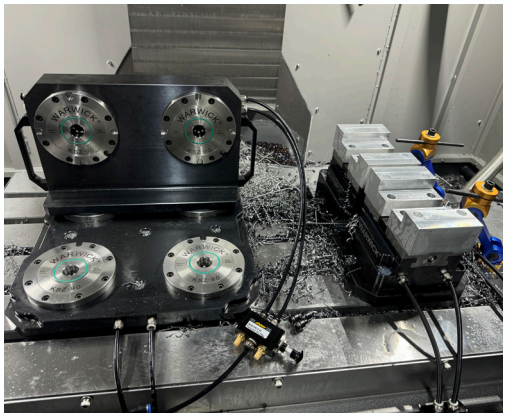

KSZ90-T4
KSZ90-T2-LS

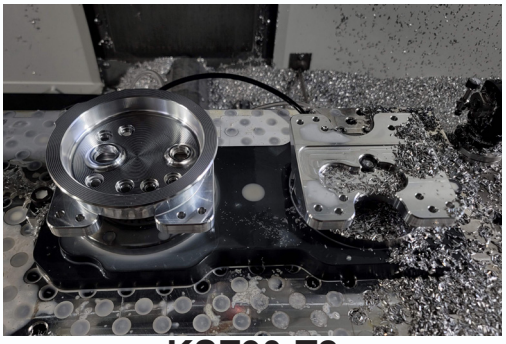

KSZ90-T2

KSZ115-T1 X 8

KSZ90-T2

KSZ115-T1 X 8

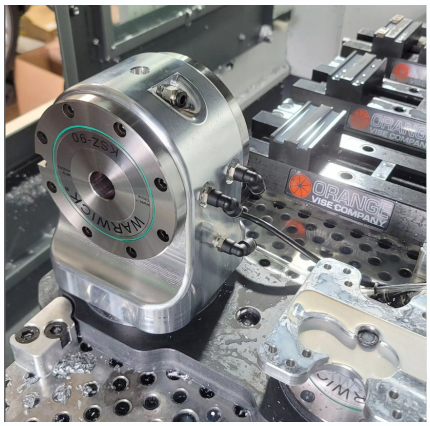

KSZ90-T1

SIMPLE - KSG - 52S

夹紧托盘 | Clamping Pallets

手动零点定位

采用 4 个拉钉定位，可长时间保持下拉力，通过扳手锁紧。

Manual Zero PointPositioning

It is positioned with 4 rivets to maintain the pull-down force for a long time and is locked by a wrench.

供应范围
夹紧模块，紧固螺钉，可操作手册，夹紧拉钉

Scope of delivery
Clamping module, fastening screws, operable manual, clamping rivets

技术数据 | Technical data

型号 Description	编号 ID	定位直径 Positioning diameter	最高扭力 Max. torque [N.m]	重复精度 Repeat accuracy [mm]	重量 Weight [kg]
KSG - 52S	15000	Φ16 ①	30	0.01	2.1

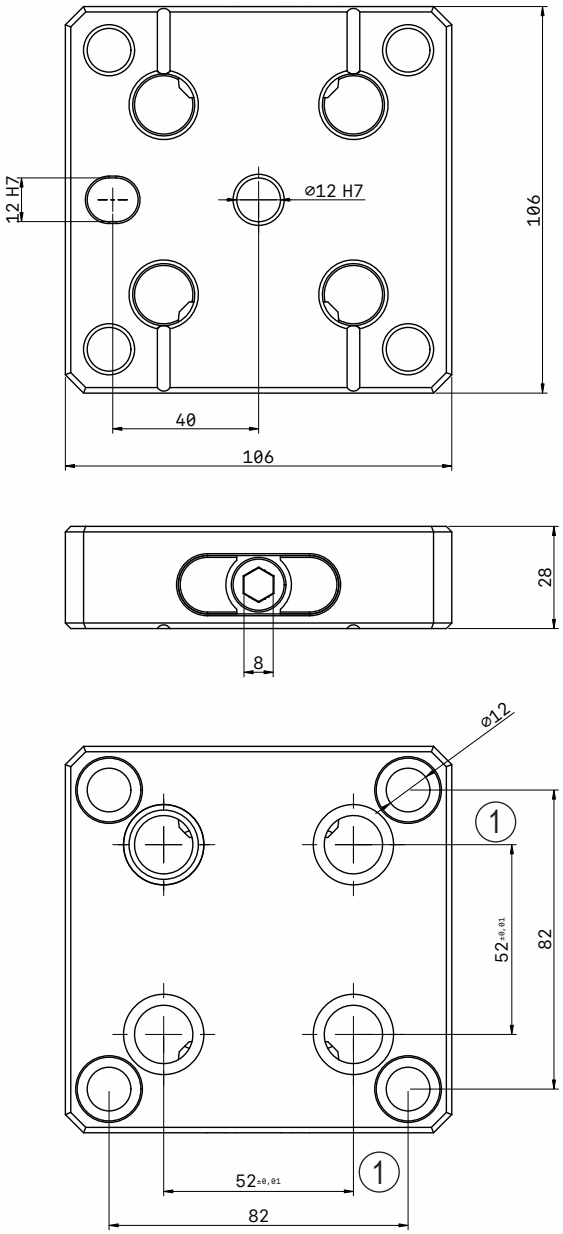

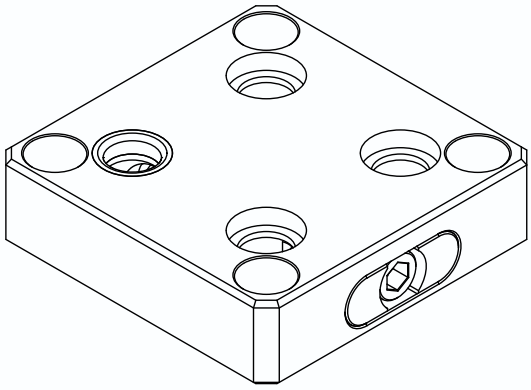

① 52 型拉钉锁紧接口
Type 52 positioning interface

手动零点定位

采用4个拉钉定位，可长时间保持下拉力，通过扳手锁紧。

Manual Zero PointPositioning

It is positioned with 4 rivets to maintain the pull-down force for a long time and is locked by a wrench.

供应范围
夹紧模块，紧固螺钉，可操作手册，夹紧拉钉

Scope of delivery
Clamping module, fastening screws, operable manual, clamping rivets

技术数据 | Technical data

型号 Description	编号 ID	定位直径 Positioning diameter	最高扭力 Max. torque [N.m]	重复精度 Repeat accuracy [mm]	重量 Weight [kg]
KSG - 52R	15010	Φ16 ①	30	0.01	3.1

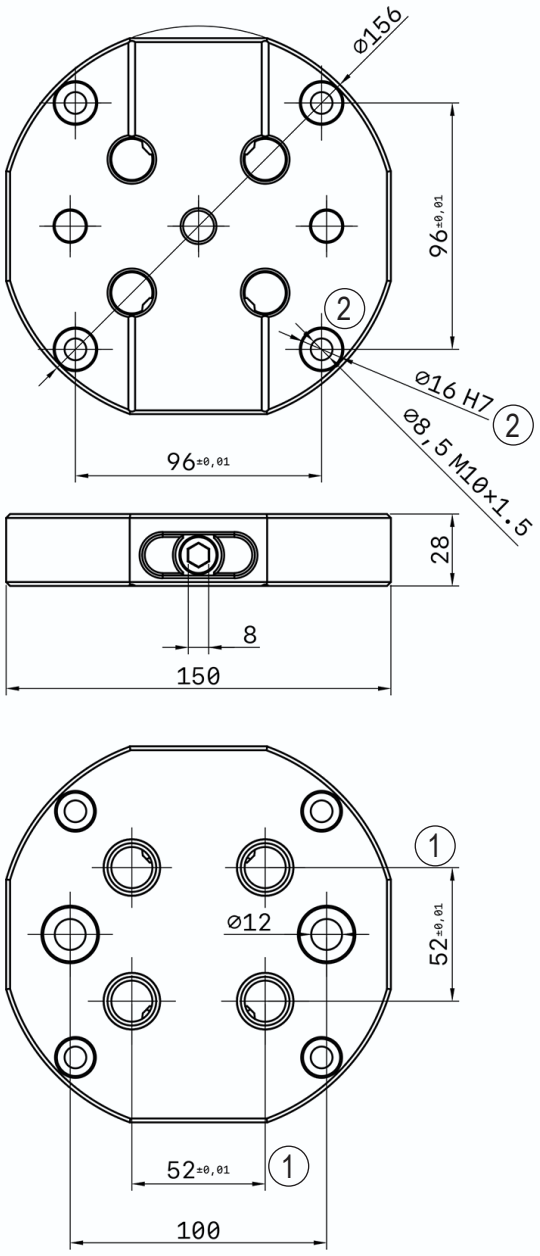

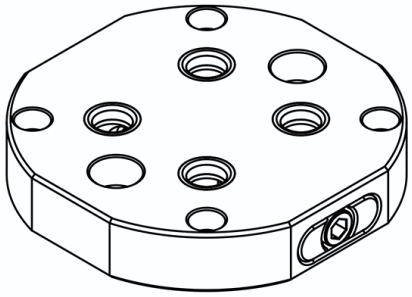

① 52 型拉钉锁紧接口
Type 52 positioning interface

SIMPLE - KSG - 96S

手动零点定位 | Manual zero point positioning

手动零点定位

采用 4 个拉钉定位，可长时间保持下拉力，通过扳手锁紧。

Manual Zero PointPositioning

It is positioned with 4 rivets to maintain the pull-down force for a long time and is locked by a wrench.

供应范围
夹紧模块，紧固螺钉，可操作手册，夹紧拉钉

Scope of delivery
Clamping module, fastening screws, operable manual, clamping rivets

技术数据 | Technical data

型号 Description	编号 ID	定位直径 Positioning diameter	最高扭力 Max. torque [N.m]	重复精度 Repeat accuracy [mm]	重量 Weight [kg]
KSG - 96S	15100	Φ20 (1)	30	0.01	7.1

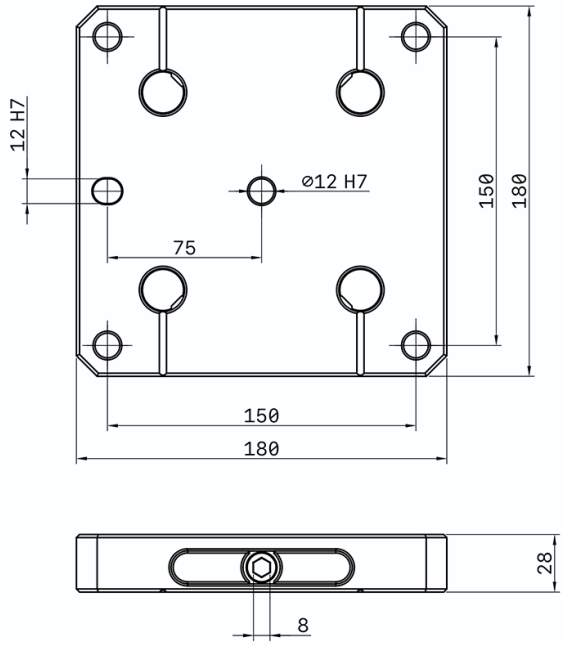

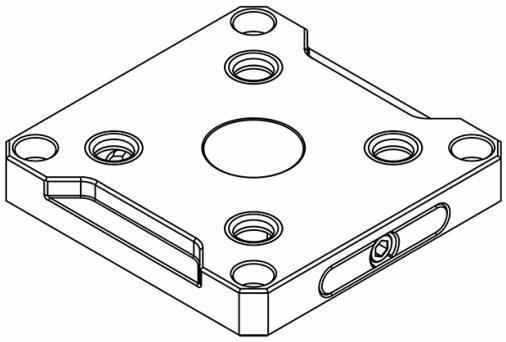

(1) 96 型拉钉锁紧接口
Type 96 positioning interface

SIMPLE-Clamping Pins 52/96

手动零点定位 | Manual zero point positioning

手动零点定位

采用 4 个拉钉定位，可长时间保持下拉力，通过扳手锁紧。

Manual Zero PointPositioning

It is positioned with 4 rivets to maintain the pull-down force for a long time and is locked by a wrench.

供应范围
夹紧模块，紧固螺钉，可操作手册，夹紧拉钉

Scope of delivery
Clamping module, fastening screws, operable manual, clamping rivets

技术数据 | Technical data

型号 Description	编号 ID	定位直径 Positioning diameter	最高扭力 Max. torque [N.m]	重复精度 Repeat accuracy [mm]	重量 Weight [kg]
KSG -Pro	15200	Φ16 ① Φ20 ②	30	0.01	7.1

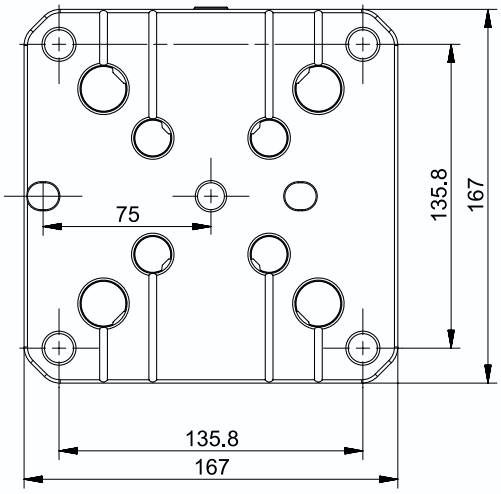

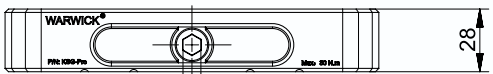

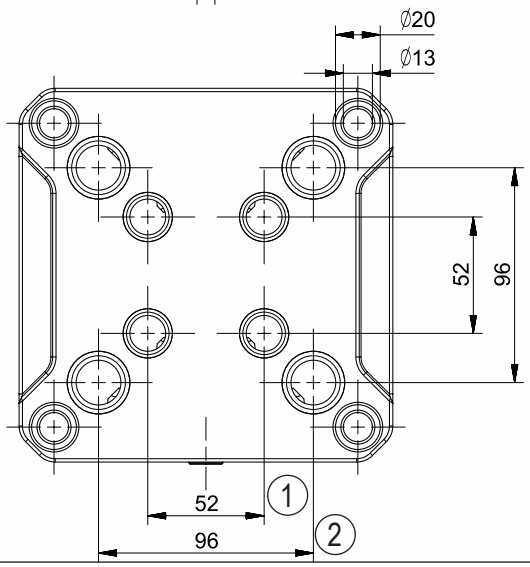

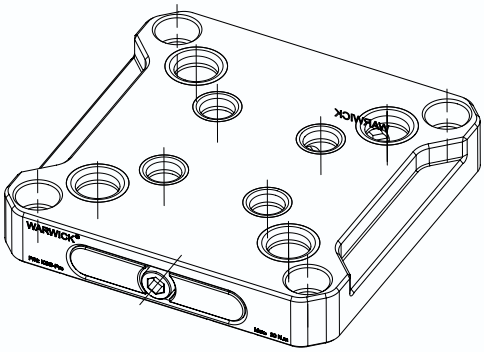

① 52 型拉钉锁紧接口
Type 52 positioning interface

② 96 型拉钉安装位置
Type 96 rivet mounting position

SIMPLE - KSG - Pro-L

手动零点定位 | Manual zero point positioning

手动零点定位

采用 4 个拉钉定位，可长时间保持下拉力，通过扳手锁紧。

Manual Zero PointPositioning

It is positioned with 4 rivets to maintain the pull-down force for a long time and is locked by a wrench.

供应范围
夹紧模块，紧固螺钉，可操作手册，夹紧拉钉

Scope of delivery
Clamping module, fastening screws, operable manual, clamping rivets

技术数据 | Technical data

型号 Description	编号 ID	定位直径 Positioning diameter	最高扭力 Max. torque [N.m]	重复精度 Repeat accuracy [mm]	重量 Weight [kg]
KSG - Pro-L	15202	Φ20 ①	30	0.01	24.5

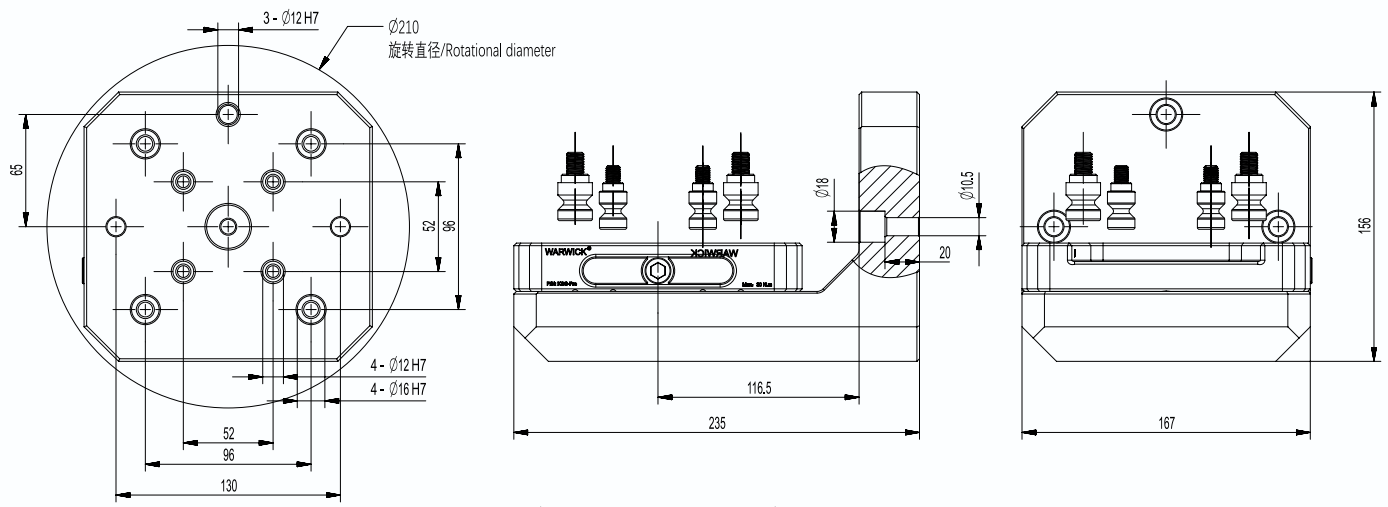

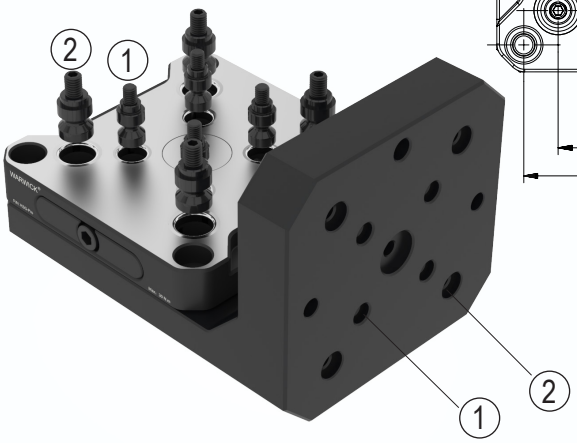

① 52 型拉钉锁紧接口
Type 52 positioning interface

② 96 型拉钉安装位置
Type 96 rivet mounting position

夹紧拉钉

Clamping Pins

供货范围
包括固定螺钉的夹紧拉钉

Scope of delivery
Clamping pins including fastening screws

型号 Description	编号 ID	材料 Material	保持力 Holding force M8 [kN]	保持力 Holding force M10 [kN]	保持力 Holding force M12 [kN]	功能 Version	重量 Weight [kg]
52S- 16	15500	钢 | steel	20			定位拉钉 | Positioning pin	0.1
96S - 20	15502	钢 | steel		35		定位拉钉 | Positioning pin	0.15

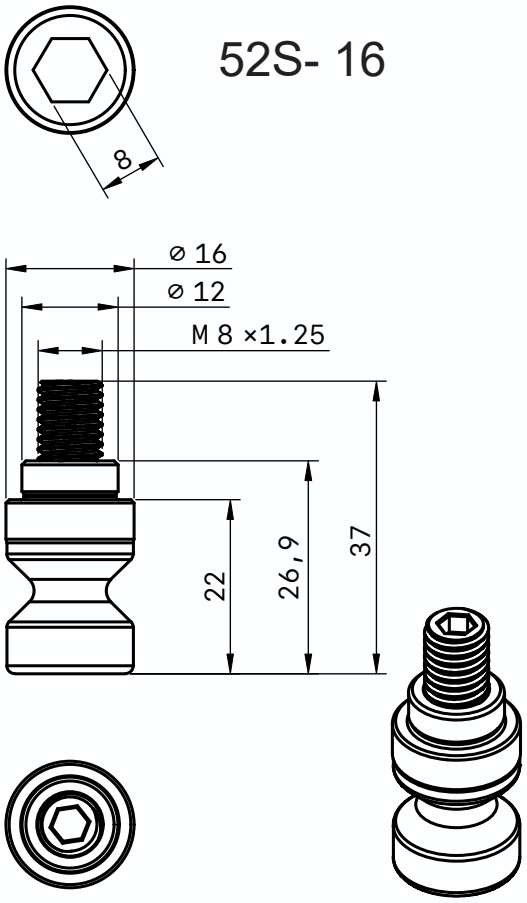

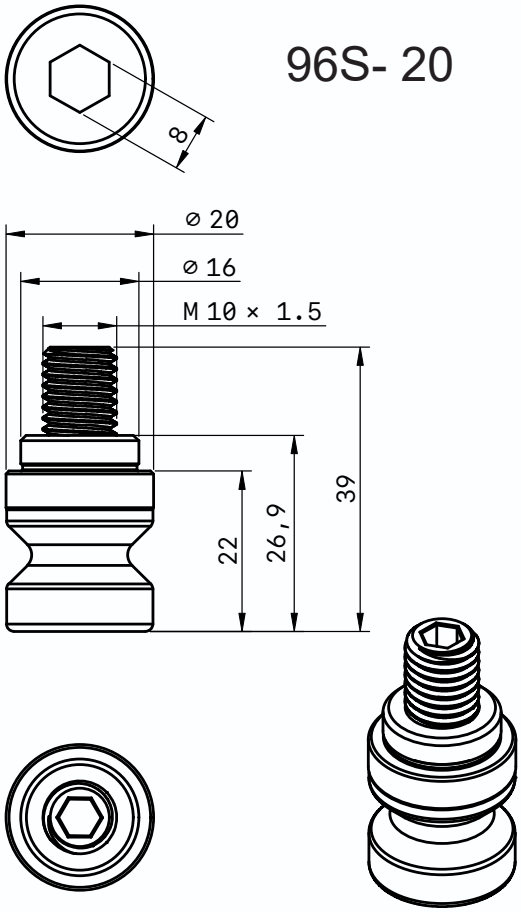

RELIABLE - KSP

气动自定心虎钳 | Pneumatic centering vice

可靠

超高的夹紧精度≤ 0. 02mm
即使断气也能保持 50% 夹紧力

虎钳采用特殊的驱动机构，因此装夹工件不会上浮。

卡爪采用模块化设计，采用 WARWICK 专用的接口，可安装硬爪及软爪。充分发挥虎钳的潜能。

为了保护操作人员的安全，我们将虎钳的行程限定在 10mm 以内。

RELIABLE

Ultra-high clamping accuracy ≤ 0. 02mm
50% Clamping force is maintained even when air is cut off

The vice adopts a special drive mechanism, so the clamped workpiece will not float.

The jaws are modular in design, and adopt WARWICK special interface, which can install hard jaws and soft jaws. Unleash the full potential of your vise.

In order to protect the safety of the operator, we limit the travel of the vise to less than 10mm.

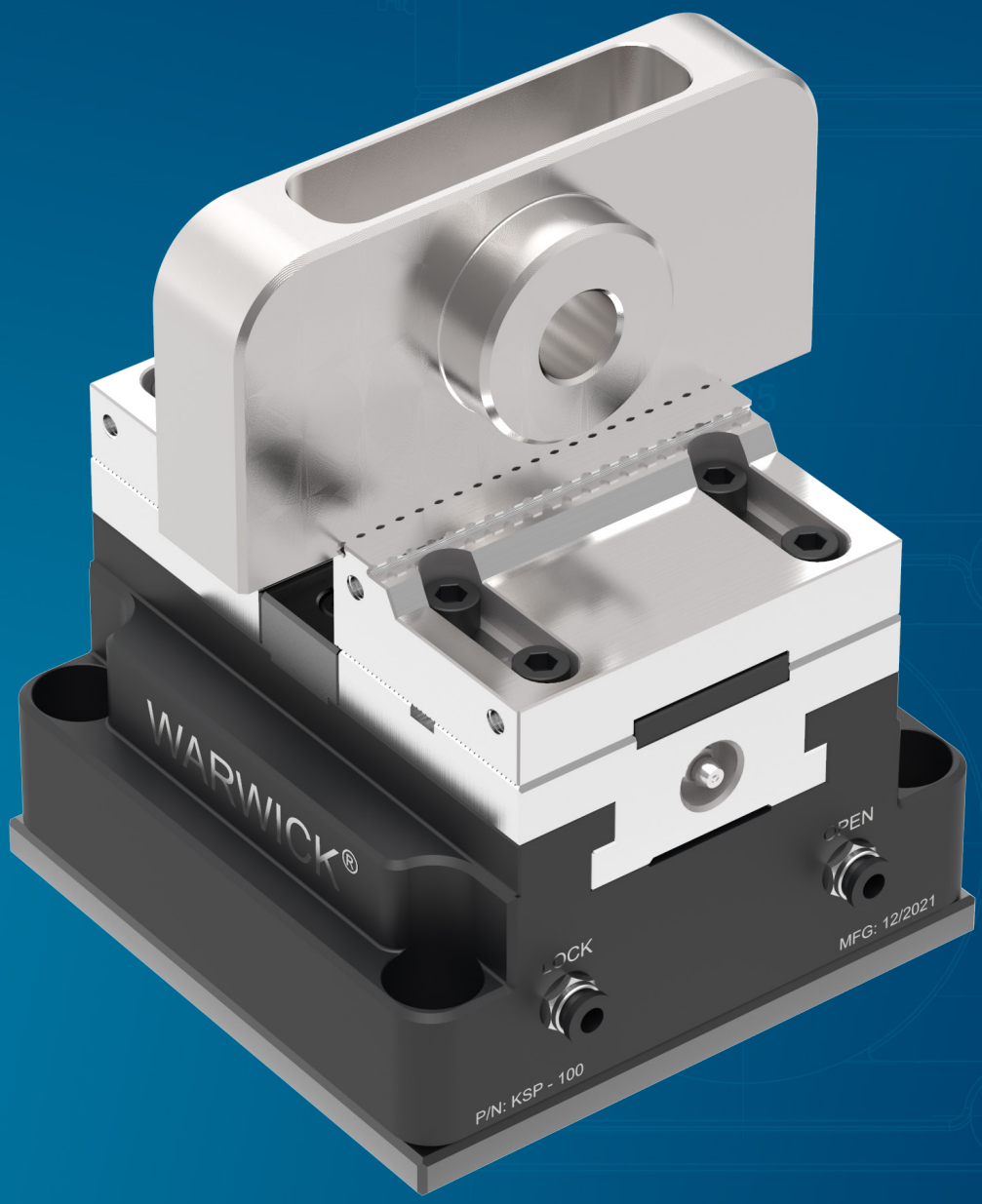

优势 – 您的利益

精密楔形自定心虎钳
用于最高品质的要求
进行出色的加工过程

低高度
充分利用机床和系统的最大刚性

立方设计
在 2 轴 4 轴机床上进行 6 面加工的理想选择

楔形吊钩系统的高效率
高夹紧力确保安全夹紧

优化的润滑系统
确保始终如一的高夹紧力

标配带有槽或齿的基体
在钳口使用范围具有很高的灵活性

由于使用了加长的基础钳口导向装置，因此可以提供最佳的钳口支撑，从而在较长的使用寿命内提供较高的夹紧力

功能部件的所有工作面均经过研磨和硬化处理，确保使用寿命长

Advantages – Your benefits

Precision wedge hook clamping force block for top-quality demands
Allows excellent machining processes

Low height
Maximum use of the machine room and maximum rigidity of the system

Cubic design
Ideal for 6-sided machining with 2 set-ups on 4-axis machines

High degree of efficiency of the wedge hook system
Safe clamping due to high clamping forces

High degree of efficiency of the wedge hook system
Safe clamping due to high clamping forces

Base jaws with tongue and groove or fine serration as standard
High flexibility in the range of top jaws

Optimal jaw support due to the use of a very long base jaw guidance
Allows high clamping forces at a long service life

All sides of the functional parts are ground and hardened
Ensures a long service life

定义夹紧力
夹紧力是在最大压力和最大扭矩下，在卡盘爪上的各个力的算术总和。。

定义重复性
重复精度是最终位置的结果
连续重复 100 次后记录。

定义重复性
卡爪更换的重复性卡爪更换的可重复性仅在夹紧方向上获得。

Definition clamping force
The clamping force is the arithmetic sum of the various forces on the chuck jaws under the maximum pressure and maximum torque.

Definition repeatability
The repeat accuracy is the result from the end position spreads after 100 consecutive strokes.

Definition repeatability
of the jaw change
The repeatability of the jaw change only obtain in clamping direction.

RELIABLE - KSP

气动自定心虎钳 | Pneumatic centering vice

可靠 -KSP
技术原理

通过楔形钩上的对角线拉力，动力从轴向可调式气缸传递到虎钳的夹紧钳口上。

RELIABLE-KSP
Technology

The power is transferred from the axially adjustable pneumatic cylinder to the slightly longer base jaws with the help of the diagonal pull at the wedge hook.

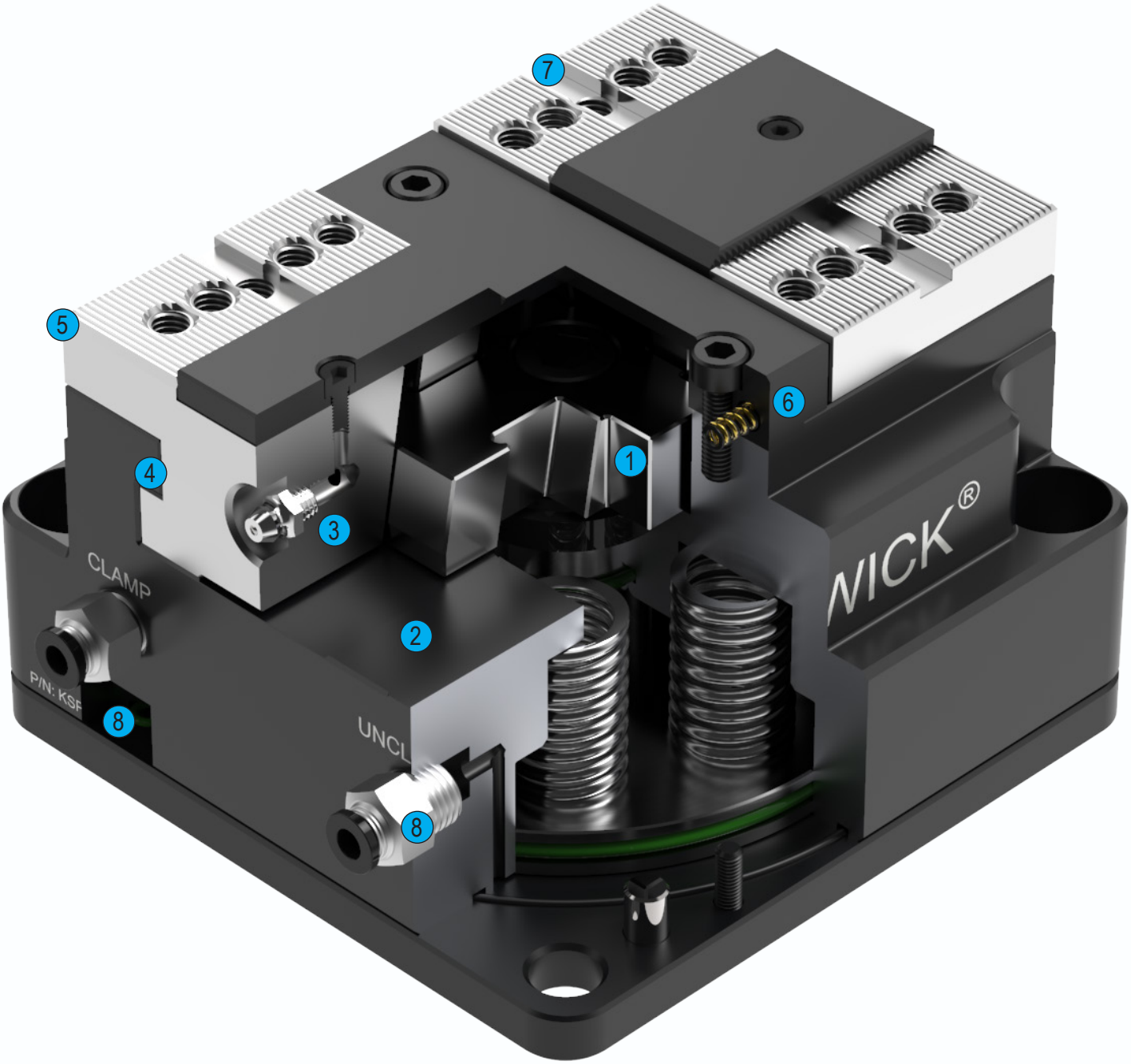

简单 = 可靠

1 楔形驱动器
在操作中提供持续高的夹紧力

2 硬化的基体
因此，寿命更长，精度更高

3 优化的润滑系统，实现最高效率

4 加长导轨
长钳口导轨提供最佳的支撑

5 低高度
增加了机器的工作空间

6 改进的设计
对灰尘特定的机械密封

7 标准卡盘钳口接口
用于使用标准 WARWICK 钳口

8 供气的方式
根据需要从侧面或底部

SIMPLE=RELIABLE

1 Wedge hook drive
Offers constantly high clamping forces in operation

2 Hardened and extremely rigid base body
Therefore a longer life span at highest precision. Even with maximum clamping force

3 Optimized lubrication system
For maximum efficiency

4 Long jaw guidance
Offers optimal support for O.D. and I.D. clamping

5 Low height
Increases the workspace of your machine

6 Improved design which is insensitive to dirt
By specific sealing

7 Standard chuck jaw interface
For using standard WARWCIK top jaws

8 The way of gas supply
From the side or bottom as needed

RELIABLE - KSP - 75

气动自定心虎钳 | Pneumatic centering vice

气动虎钳

总行程 5mm，中心夹紧精度＜ 0. 02mm，具有保压功能。

供货范围

气动自定心虎钳和顶部钳口的安装螺钉，空气软管接头和操作手册，不包含顶部钳口。

Pneumatic vise

The total stroke is 5mm, the center clamping accuracy is less than 0.02mm, and it has the function of holding pressure.

Scope of supply

Mounting screws, air hose fittings and operator's manual for a pneumatic self-centering vise and upper jaw, excluding upper jaw.

型号 Description	编号 ID	行程 Stroke/jaw [mm]	6 bar 夹紧力 6 barClamping force* [N]	最大气压 Max. pressure [bar]	重复精度 Repeat accuracy vise* [mm]	钳口高度 ≤ Max. jaw height [mm]	气压消耗量 Air consumption per double stroke at 7 bar [m³]	开关时间 Closing/ opening time [s]	重量 Weight [kg]
KSP-75	20100	2.5	9000	9	0.02	60	10.4E-9 m³/s	0.5	8

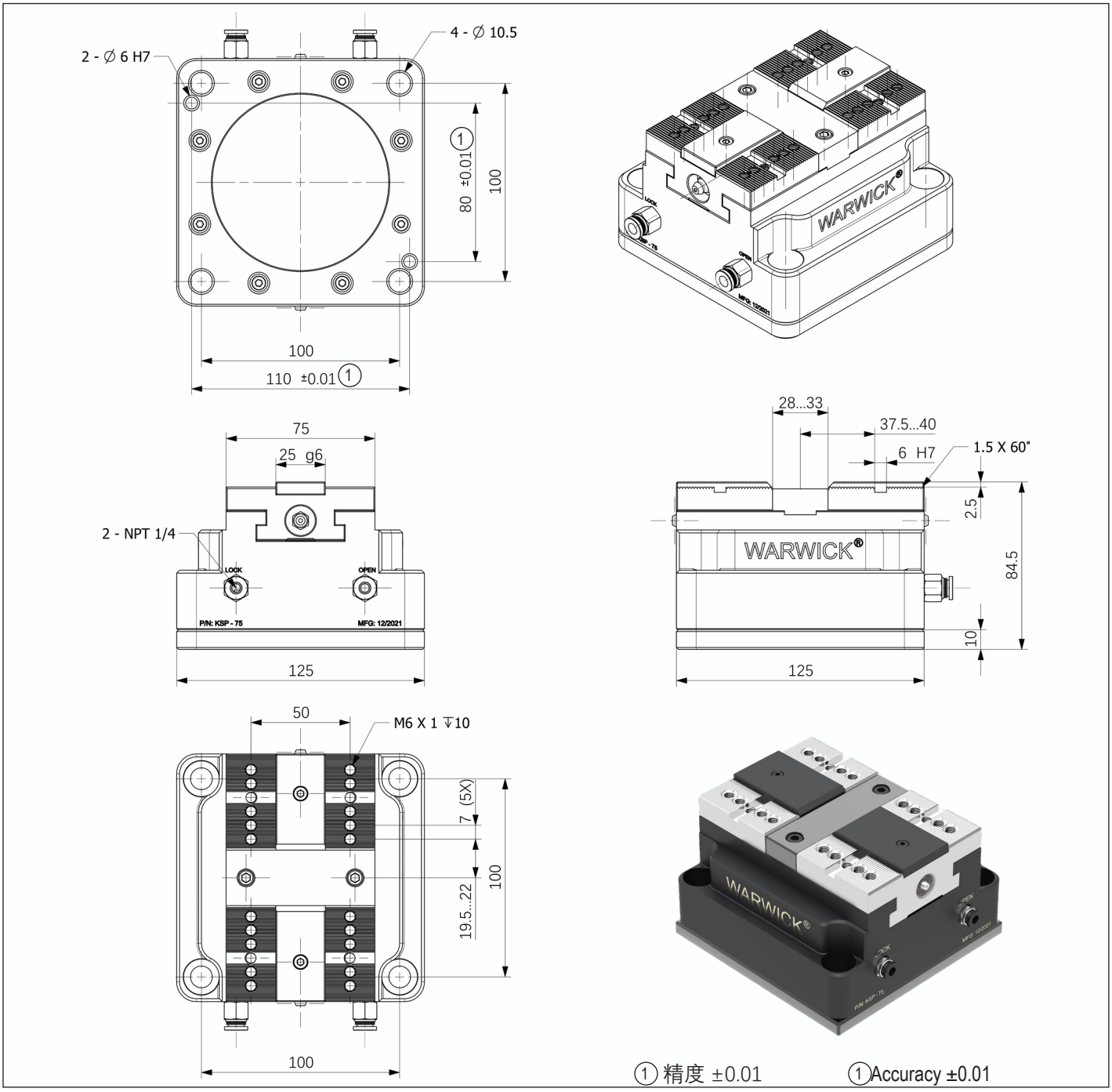

气动虎钳

总行程 5mm，中心夹紧精度＜ 0. 02mm，具有保压功能。

供货范围

气动自定心虎钳和顶部钳口的安装螺钉，空气软管接头和操作手册，不包含顶部钳口。

Pneumatic vise

The total stroke is 5mm, the center clamping accuracy is less than 0.02mm, and it has the function of holding pressure.

Scope of supply

Mounting screws, air hose fittings and operator's manual for a pneumatic self-centering vise and upper jaw, excluding upper jaw.

型号 Description	编号 ID	行程 Stroke/jaw [mm]	6 bar 夹紧力 6 barClamping force* [N]	最大气压 Max. pressure [bar]	重复精度 Repeat accuracy vise* [mm]	钳口高度 ≤ Max. jaw height [mm]	气压消耗量 Air consumption per double stroke at 7 bar [m³]	开关时间 Closing/ opening time [s]	重量 Weight [kg]
KSP-100	20110	2.5	15000	9	0.02	60	14.4E-9 m³/s	0.5	11

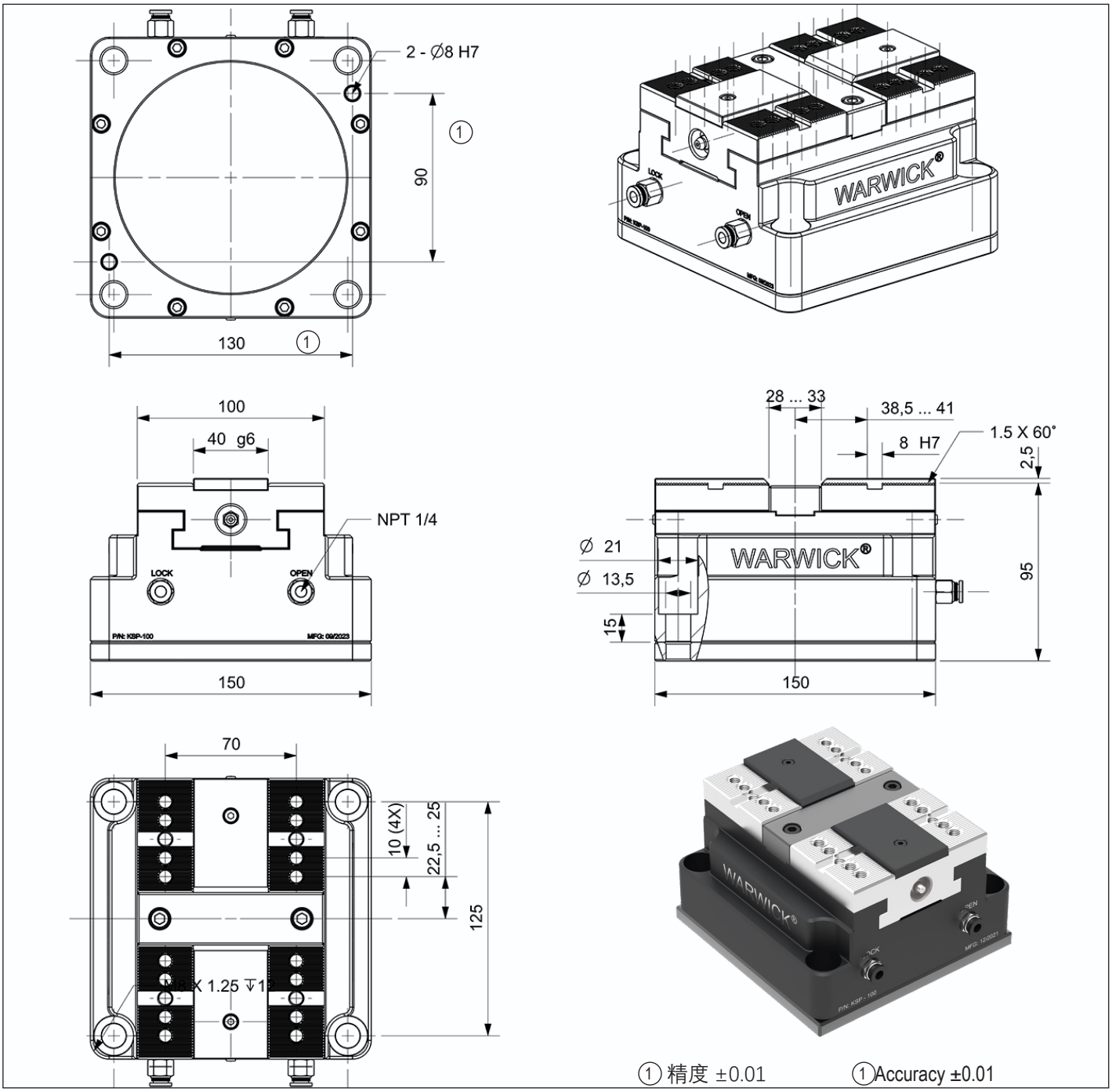

① 精度 ±0.01　　①Accuracy ±0.01

RELIABLE - KSP - 150

气动自定心虎钳 | Pneumatic centering vice

气动虎钳

总行程 10mm，中心夹紧精度＜ 0. 02mm，具有保压功能。

供货范围

气动自定心虎钳和顶部钳口的安装螺钉，空气软管接头和操作手册，不包含顶部钳口。

Pneumatic vise

The total stroke is 10mm, the center clamping accuracy is less than 0.02mm, and it has the function of holding pressure.

Scope of supply

Mounting screws, air hose fittings and operator's manual for a pneumatic self-centering vise and upper jaw, excluding upper jaw.

型号 Description	编号 ID	行程 Stroke/jaw [mm]	6 bar 夹紧力 6 barClamping force* [N]	最大气压 Max. pressure [bar]	重复精度 Repeat accuracy vise* [mm]	钳口高度 ≤ Max. jaw height [mm]	气压消耗量 Air consumption per double stroke at 7 bar [m³]	开关时间 Closing/opening time [s]	重量 Weight [kg]
KSP-150	20130	5	22000	9	0.03	100	20.4E-9 m³/s	0.5	28

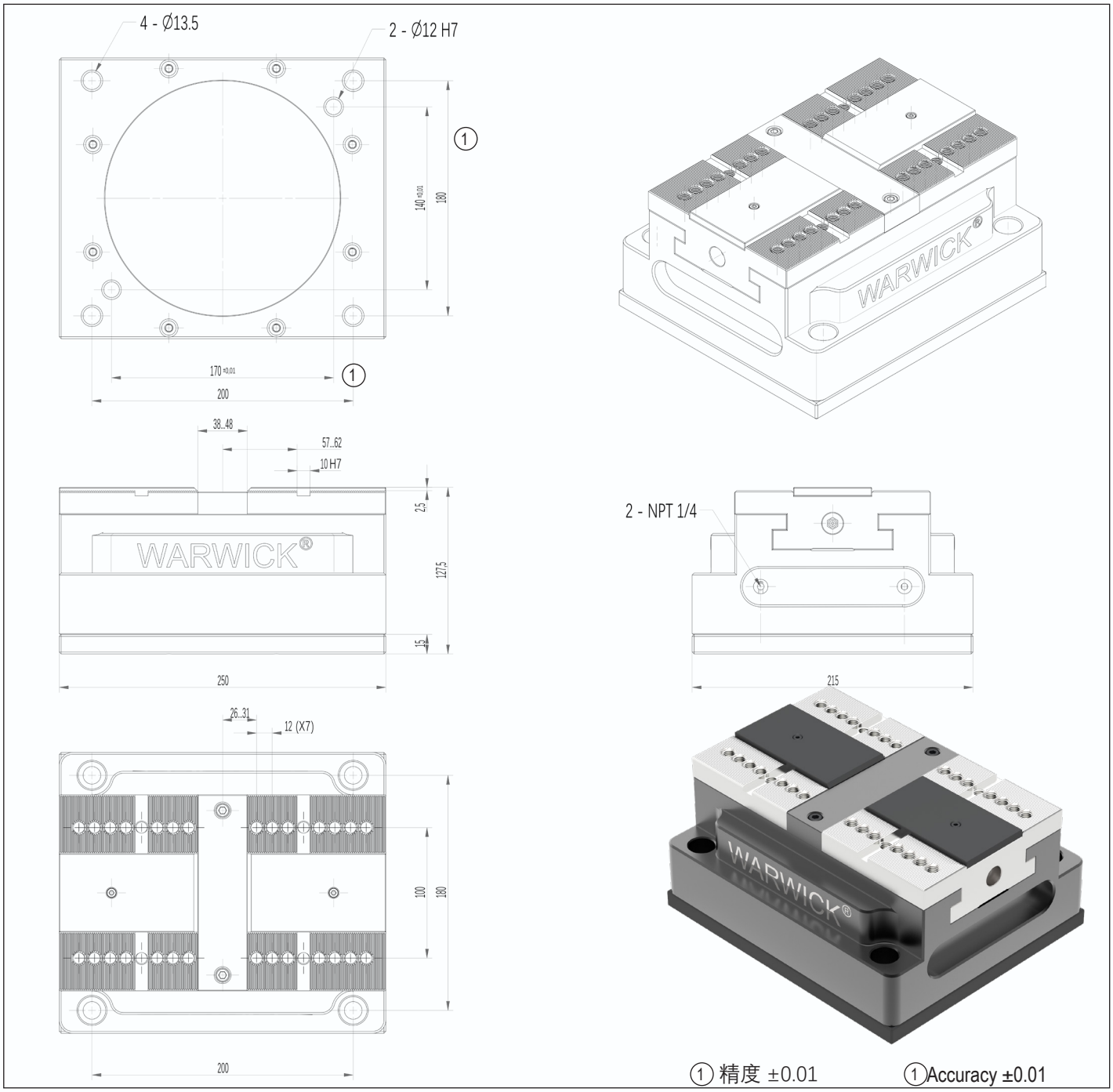

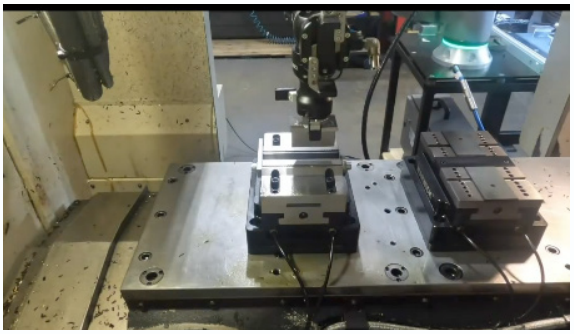

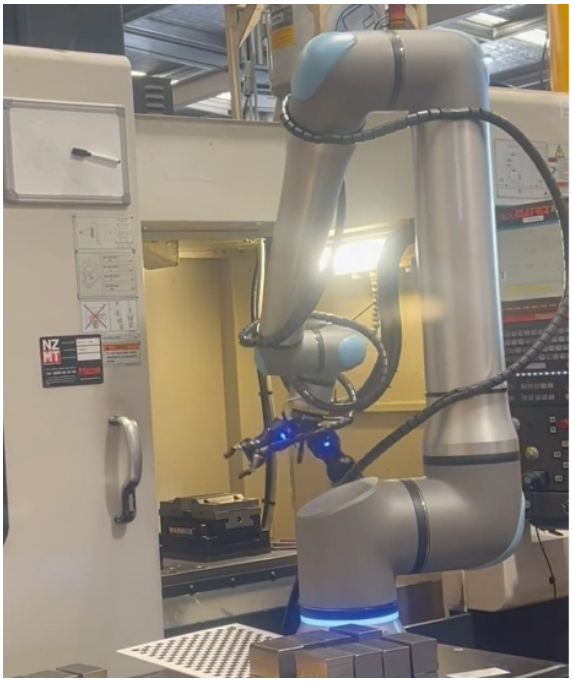

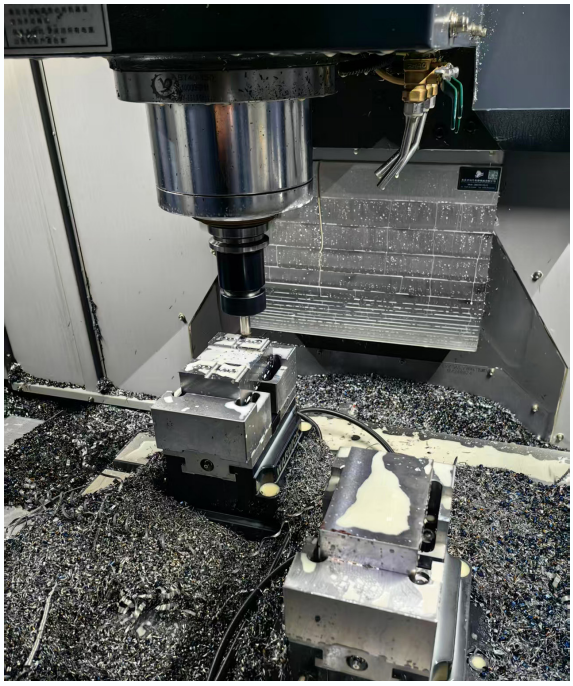

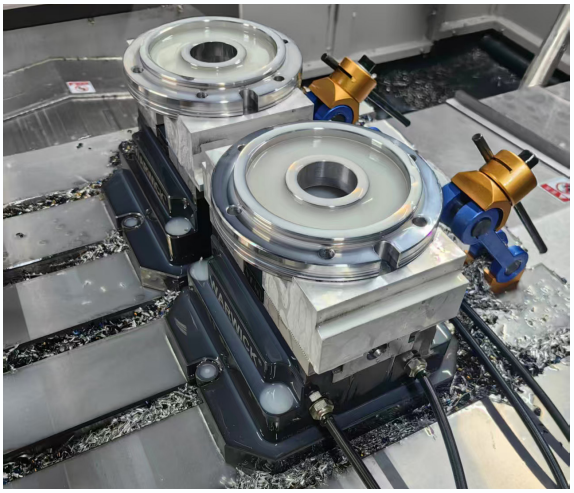

RELIABLE - KSP2 - 75

气动自定心虎钳丨 Pneumatic centering vice

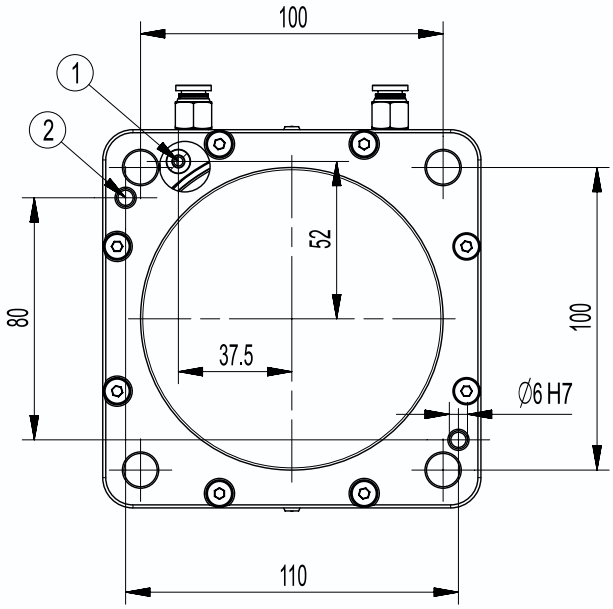

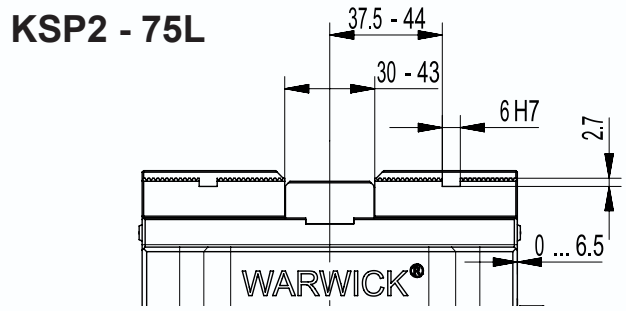

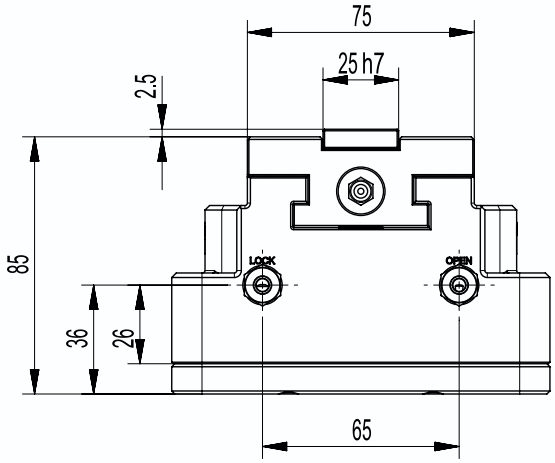

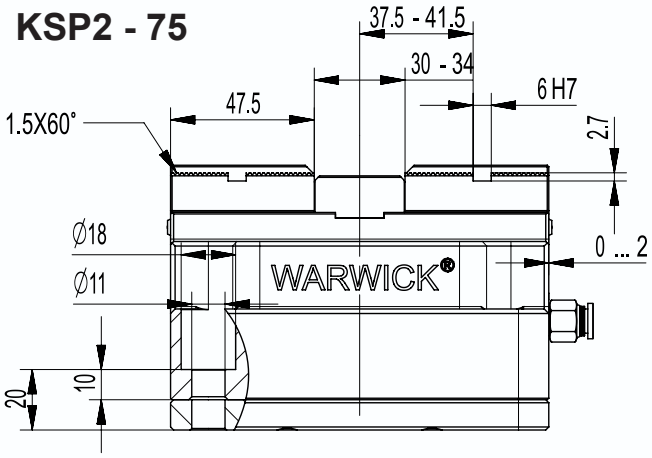

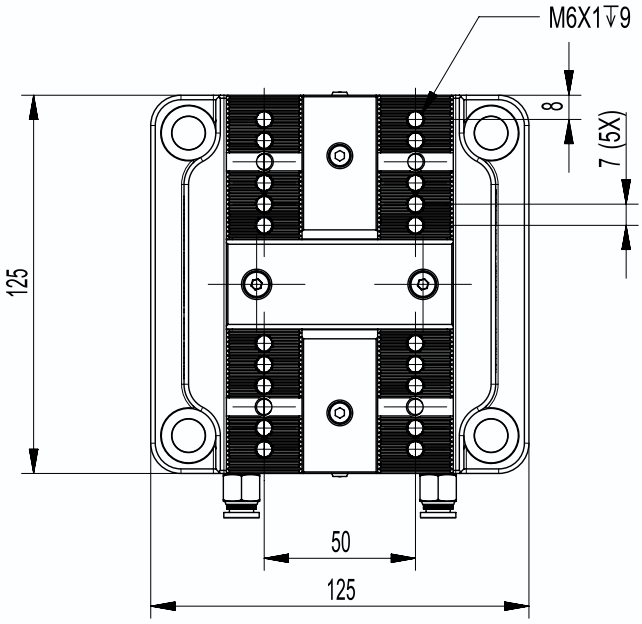

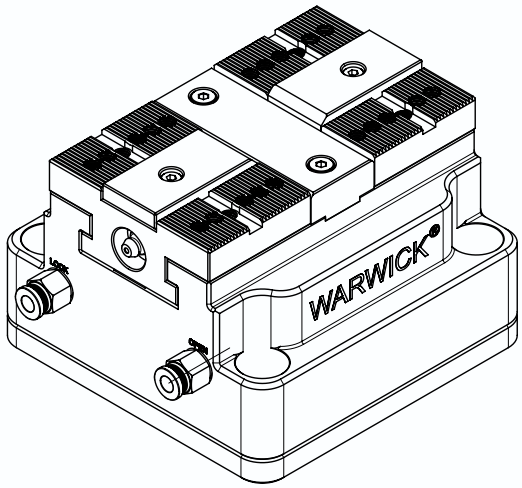

① 增加夹紧力底面进气孔
② 定位销钉孔

① Increase the clamping force air intake
② Locating pin holes

技术数据 | Technical data

型号 Description	编号 ID	单个钳口行程 Stroke per jaw [mm]	最大钳口高度 Max. jaw height [mm]	重复精度 Repeat accuracy [mm]	打开锁紧时间 Closing/opening time [S]	0.68 bar 夹紧力 Clamping force at 0.68 bar [kN]	弹簧夹紧力 Additional clamping force resulting from spring assembly [kN]	工作气压 Operating pressure [bar]	一次循环的耗气量 Air consumption per double stroke at 6 bar [cm³]	重量 Weight [kg]
KSP2 - 75	20101	2	50	0.01	0.6	12.5	5	4 - 9	1224	9
KSP2 - 75L	20102	6.5	100	0.01	0.6	7	3	4 - 9	1224	9

• 有关上述设备版本的详细说明，请参见第 B3 页和第 B4 页。
• 从第 B 页开始，匹配系统和顶钳口。

供货范围

气动自定心虎钳、卡爪安装螺钉、卡爪安装扳手、操作手册电子版

综合最大夹紧力

夹紧力是在最大 6.8bar 压力下，在最大开口处，使用传感器测量所显示的值。

弹簧组件的夹紧力

由于弹簧张力，弹簧组件引起的夹紧力增加取决于行程。在“打开”状态下达到最大弹簧力，在“关闭”状态下达到最小弹簧力。

• See pages B3 and B4 for detailed descriptions of the above device versions.
• From page B, match the system and top jaws.

Scope of delivery

Pneumatic self-centering vise, jaw mounting screws, jaw mounting wrench, electronic version of the operating manual

Combined maximum clamping force

The clamping force is measured at the maximum opening at a maximum pressure of 6.8 bar and the displayed value is measured using a sensor.

The clamping force of the spring assembly

The increase in clamping force caused by the spring assembly depends on the stroke due to the spring tension. The maximum spring force is reached in the "on" state and the minimum spring force in the "off" state.

RELIABLE - KSP2 - 100

气动自定心虎钳丨 Pneumatic centering vice

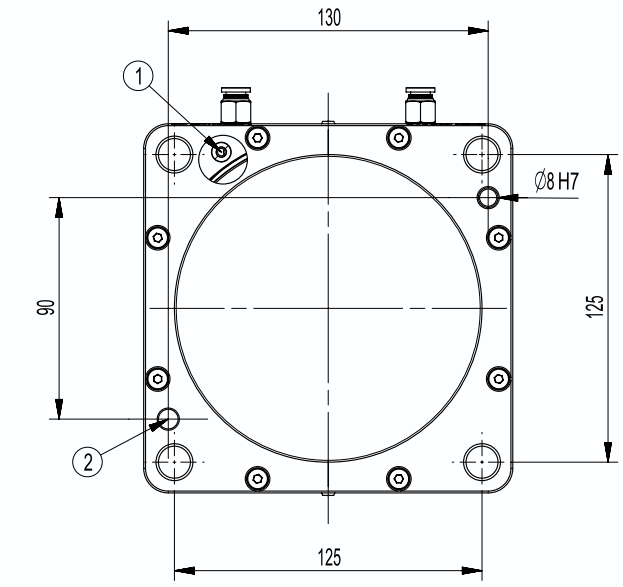

KSP2 - 100L

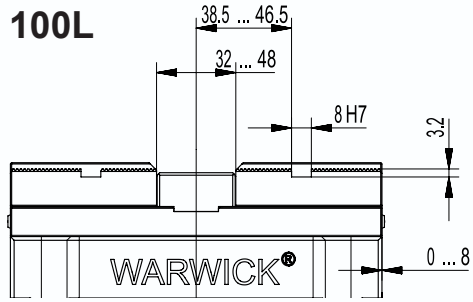

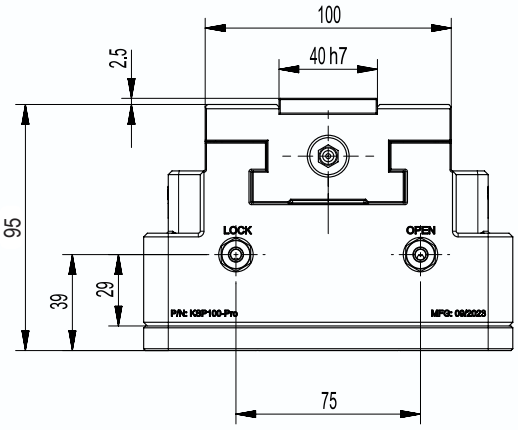

KSP2 - 100

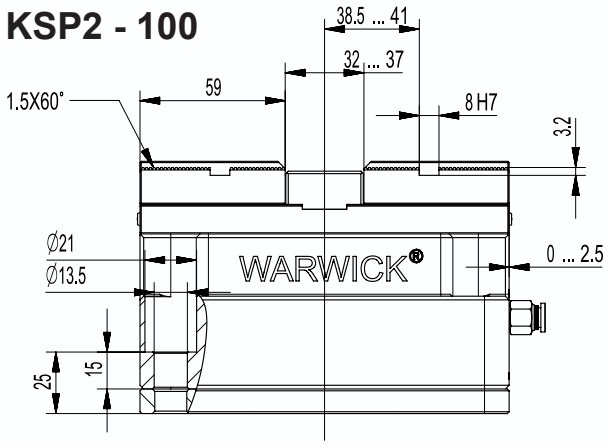

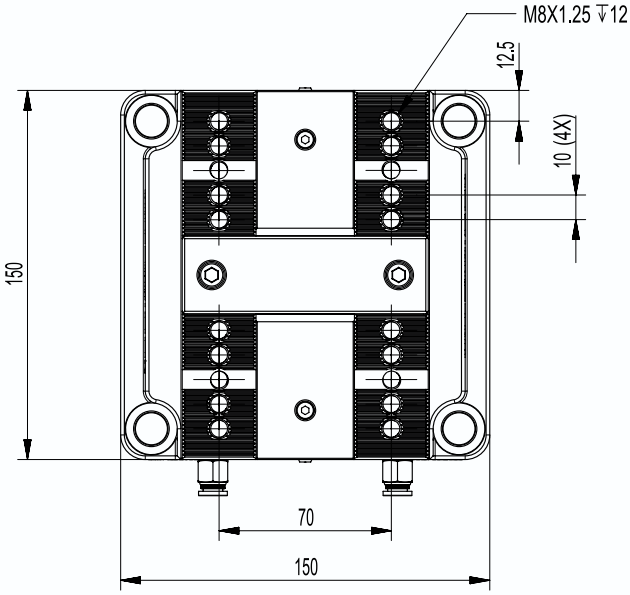

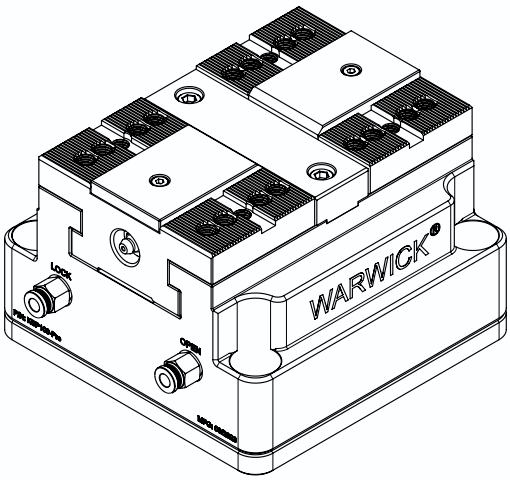

① 增加夹紧力底面进气孔
② 定位销钉孔

① Increase the clamping force air intake
② Locating pin holes

技术数据 | Technical data

型号 Description	编号 ID	单个钳口行程 Stroke per jaw [mm]	最大钳口高度 Max. jaw height [mm]	重复精度 Repeat accuracy [mm]	打开锁紧时间 Closing/opening time [S]	0.68 bar 夹紧力 Clamping force at 0.68 bar [kN]	弹簧夹紧力 Additional clamping force resulting from spring assembly [kN]	工作气压 Operating pressure [bar]	一次循环的耗气量 Air consumption per double stroke at 6 bar [cm³]	重量 Weight [kg]
KSP2 - 100	20111	2.5	60	0.01	0.6	20	6	4 - 9	2160	13
KSP2 - 100L	20112	8	120	0.01	0.6	10	4	4 - 9	2160	13

• 有关上述设备版本的详细说明，请参见第 B3 页和第 B4 页。
• 从第 B 页开始，匹配系统和顶钳口。

供货范围

气动自定心虎钳、卡爪安装螺钉、卡爪安装扳手、操作手册电子版

综合最大夹紧力

夹紧力是在最大 6.8bar 压力下，在最大开口处，使用传感器测量所显示的值。

弹簧组件的夹紧力

由于弹簧张力，弹簧组件引起的夹紧力增加取决于行程。在“打开”状态下达到最大弹簧力，在“关闭”状态下达到最小弹簧力。

• See pages B3 and B4 for detailed descriptions of the above device versions.
• From page B, match the system and top jaws.

Scope of delivery

Pneumatic self-centering vise, jaw mounting screws, jaw mounting wrench, electronic version of the operating manual

Combined maximum clamping force

The clamping force is measured at the maximum opening at a maximum pressure of 6.8 bar and the displayed value is measured using a sensor.

The clamping force of the spring assembly

The increase in clamping force caused by the spring assembly depends on the stroke due to the spring tension. The maximum spring force is reached in the "on" state and the minimum spring force in the "off" state.

RELIABLE - KSP2 - 125

气动自定心虎钳丨 Pneumatic centering vice

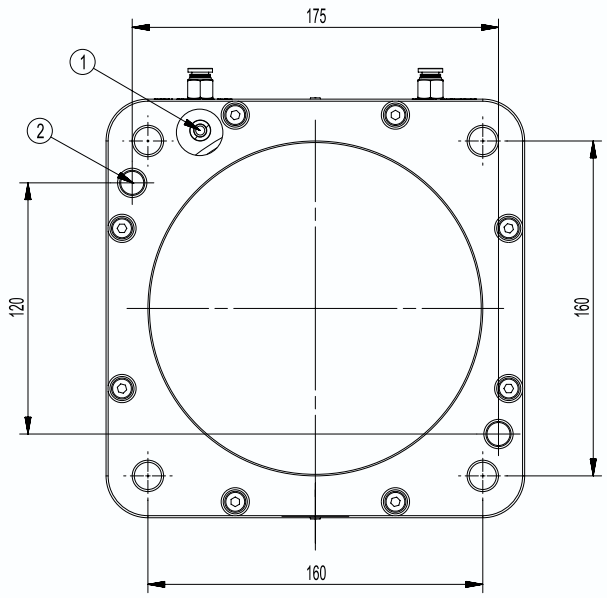

KSP2 - 125L

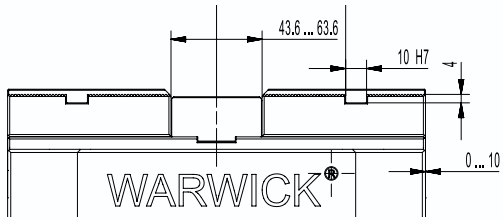

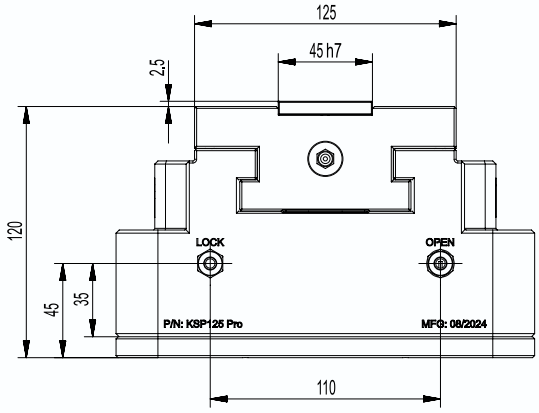

KSP2 - 125

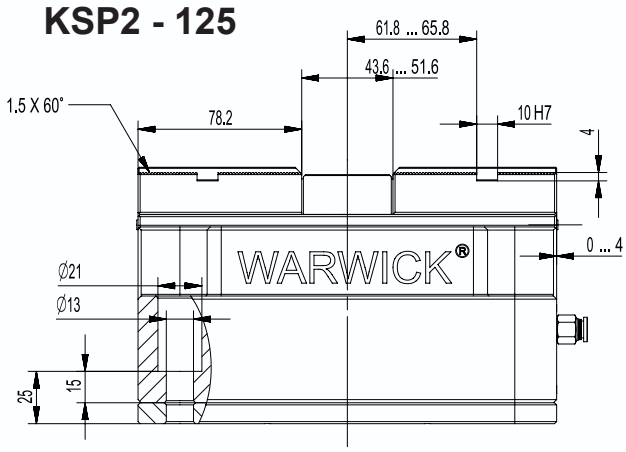

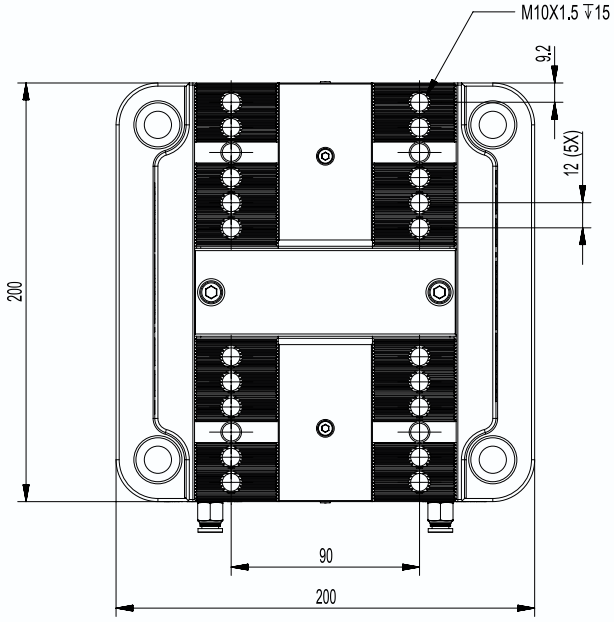

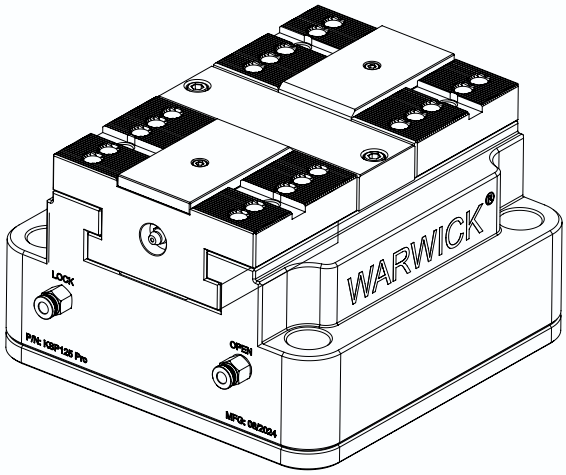

① 增加夹紧力底面进气孔
② 定位销钉孔

① Increase the clamping force air intake
② Locating pin holes

技术数据 | Technical data

型号 Description	编号 ID	单个钳口行程 Stroke per jaw [mm]	最大钳口高度 Max. jaw height [mm]	重复精度 Repeat accuracy [mm]	打开锁紧时间 Closing/opening time [S]	0.68 bar 夹紧力 Clamping force at 0.68 bar [kN]	弹簧夹紧力 Additional clamping force resulting from spring assembly [kN]	工作气压 Operating pressure [bar]	一次循环的耗气量 Air consumption per double stroke at 6 bar [cm³]	重量 Weight [kg]
KSP2 - 125	20121	4	60	0.02	0.6	27	5	4 - 9	5520	26
KSP2 - 125L	20122	10	120	0.02	0.6	12	3	4 - 9	5520	26

• 有关上述设备版本的详细说明，请参见第 B3 页和第 B4 页。
• 从第 B 页开始，匹配系统和顶钳口。

供货范围

气动自定心虎钳、卡爪安装螺钉、卡爪安装扳手、操作手册电子版

综合最大夹紧力

夹紧力是在最大 6.8bar 压力下，在最大开口处，使用传感器测量所显示的值。

弹簧组件的夹紧力

由于弹簧张力，弹簧组件引起的夹紧力增加取决于行程。在“打开”状态下达到最大弹簧力，在“关闭”状态下达到最小弹簧力。

• See pages B3 and B4 for detailed descriptions of the above device versions.
• From page B, match the system and top jaws.

Scope of delivery

Pneumatic self-centering vise, jaw mounting screws, jaw mounting wrench, electronic version of the operating manual

Combined maximum clamping force

The clamping force is measured at the maximum opening at a maximum pressure of 6.8 bar and the displayed value is measured using a sensor.

The clamping force of the spring assembly

The increase in clamping force caused by the spring assembly depends on the stroke due to the spring tension. The maximum spring force is reached in the "on" state and the minimum spring force in the "off" state.

RELIABLE - KSP2 - 150

气动自定心虎钳丨 Pneumatic centering vice

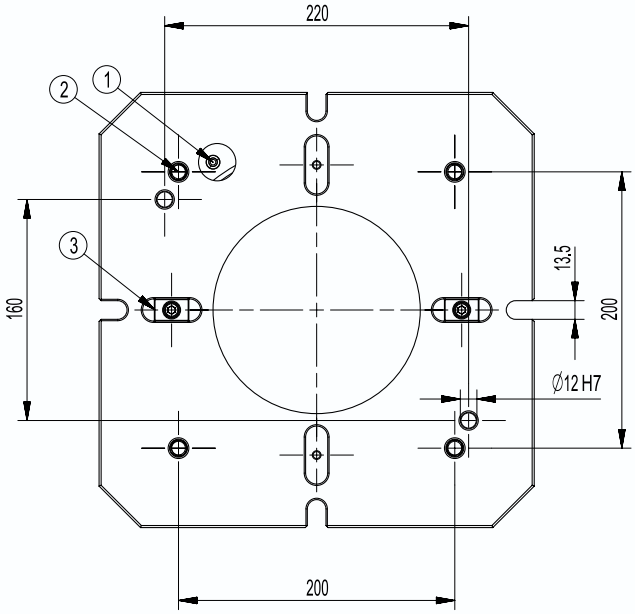

KSP2 - 150L

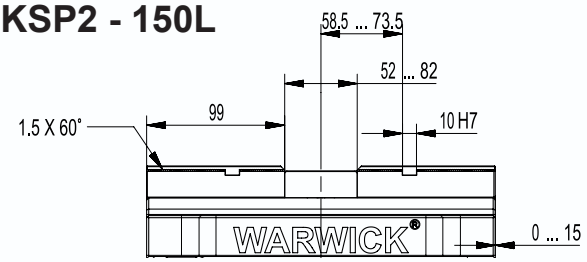

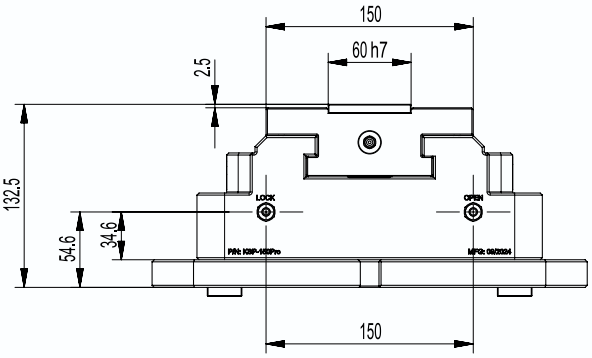

KSP2 - 150

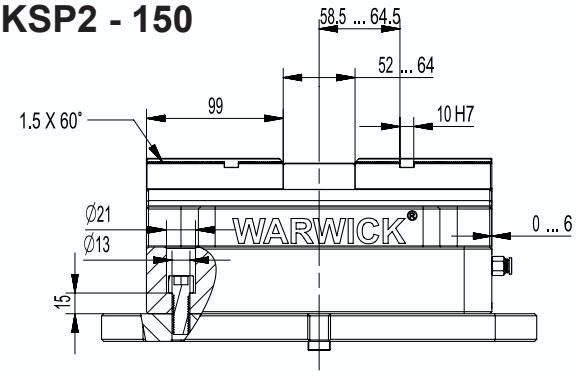

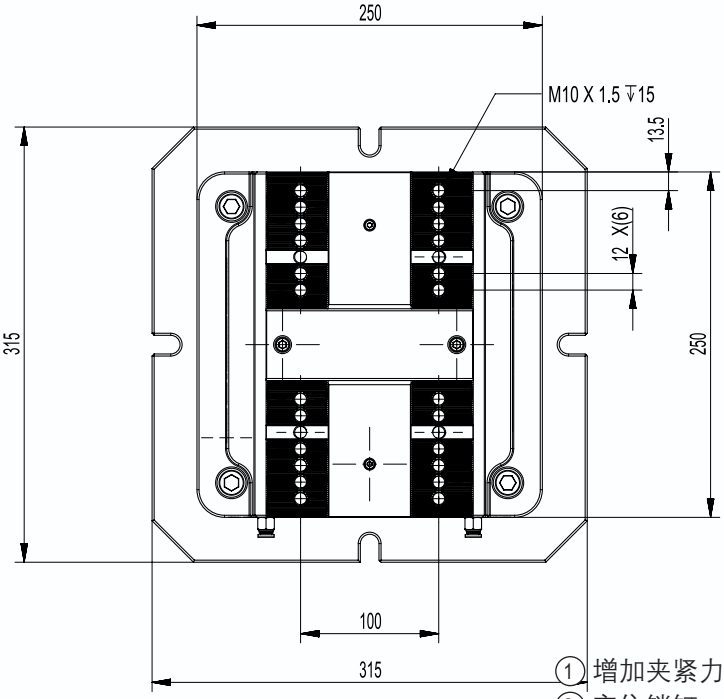

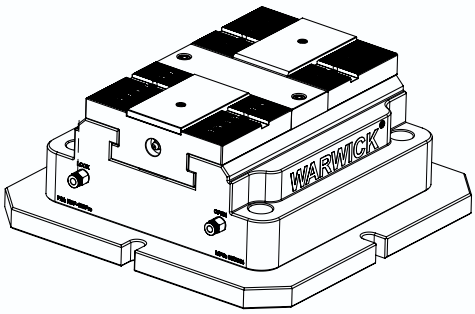

① 增加夹紧力底面进气孔
② 定位销钉

① Increase the clamping force air intake
② Locating pin holes

技术数据 | Technical data

型号 Description	编号 ID	单个钳口行程 Stroke per jaw [mm]	最大钳口高度 Max. jaw height [mm]	重复精度 Repeat accuracy [mm]	打开锁紧时间 Closing/opening time [S]	0.68 bar 夹紧力 Clamping force at 0.68 bar [kN]	弹簧夹紧力 Additional clamping force resulting from spring assembly [kN]	工作气压 Operating pressure [bar]	一次循环的耗气量 Air consumption per double stroke at 6 bar [cm³]	重量 Weight [kg]
KSP2 - 150	20131	4	60	0.02	0.6	30	5	4 - 9	5520	36
KSP2 - 150L	20132	10	120	0.02	0.6	16	3	4 - 9	5520	36

• 有关上述设备版本的详细说明，请参见第 B3 页和第 B4 页。
• 从第 B 页开始，匹配系统和顶钳口。

供货范围

气动自定心虎钳、卡爪安装螺钉、卡爪安装扳手、操作手册电子版

综合最大夹紧力

夹紧力是在最大 6.8bar 压力下，在最大开口处，使用传感器测量所显示的值。

弹簧组件的夹紧力

由于弹簧张力，弹簧组件引起的夹紧力增加取决于行程。在“打开”状态下达到最大弹簧力，在“关闭”状态下达到最小弹簧力。

• See pages B3 and B4 for detailed descriptions of the above device versions.
• From page B, match the system and top jaws.

Scope of delivery

Pneumatic self-centering vise, jaw mounting screws, jaw mounting wrench, electronic version of the operating manual

Combined maximum clamping force

The clamping force is measured at the maximum opening at a maximum pressure of 6.8 bar and the displayed value is measured using a sensor.

The clamping force of the spring assembly

The increase in clamping force caused by the spring assembly depends on the stroke due to the spring tension. The maximum spring force is reached in the "on" state and the minimum spring force in the "off" state.

顶部钳口 RZ

Top Jaw Blanks RZ

材料：S45C，可硬化 | 铝合金 6061
标准：螺钉固定孔 DIN EN ISO 4762
安装：通过槽

Material: S45C, hardenable | Aluminum 6061
Version: Fastening bores for screw DIN EN ISO 4762
Mounting: Via tongue and groove

型号 Description	编号 ID	适用于 Suitable for	A [mm]	B [mm]	C [mm]	D [mm]	B1 [mm]	B2 [mm]	T1 [mm]	T2 [mm]	夹紧范围 Clamping range [mm]	重量 Weight [kg]
TRZ-75A Aluminum 6061	20215	KSP-75	62.5	75	40	25	25	42.5	25	33	0-125	1.1
TRZ-75S Steel S45C	20216											2.7
TRZ-100A Aluminum 6061	20225	KSP-100	75	100	50	40	22	55	40	30	0-150	2.1
TRZ-100S Steel S45C	20226											5.5
TRZ-125A Aluminum 6061	20230	KSP-125	100	125	60	45	30	80	49	35	0-200	6
TRZ-125S Steel S45C	20231											12
TRZ-150A Aluminum 6061	20235	KSP-150	125	150	70	60	40	85	55	45	0-250	7.1
TRZ-150S Steel S45C	20236											19.9

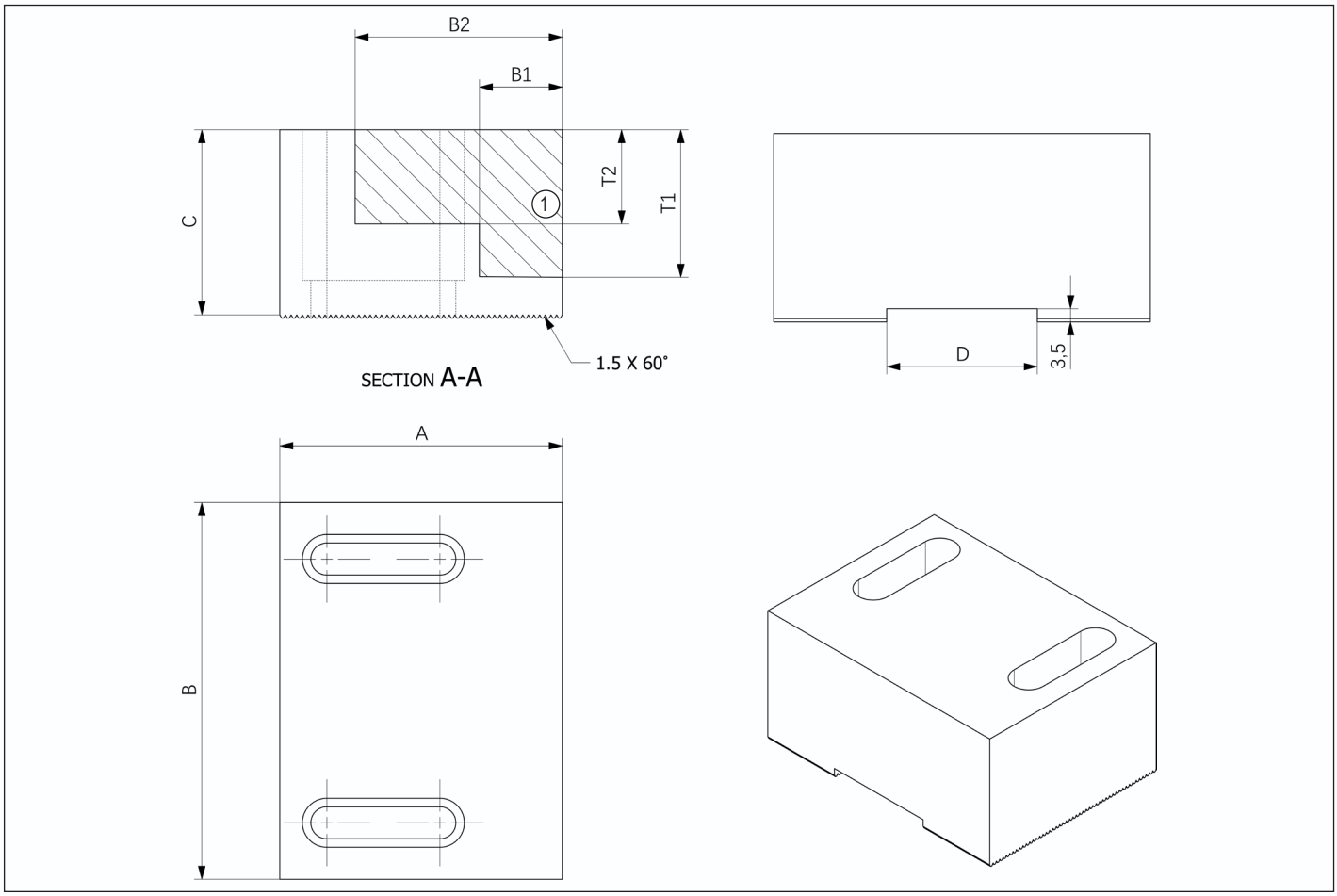

① 工作区域　　①Work surface

L 型硬爪

L-shaped hard claws

材料：42CrMo，硬化
标准：钻孔和沉头螺钉 M6 /M8 / M10
安装：通过齿 1.5 x 60°

Material: 42CrMo, Hardened
Version: Bored and countersunk for screw M6/M8/M10
Mounting: Via fine serrations 1.5 x 60°

型号 Description	编号 ID	适用于 Suitable for	A [mm]	B [mm]	C [mm]	D [mm]	B1 [mm]	B2 [mm]	C1 [mm]	C2 [mm]	D1 [mm]	D2 [mm]	E1 [mm]	E2 [mm]
YZL-75	20315	KSP-75	75	65.5	40	27	50	12	15	34.5	7	20	M8	M6
YZL-100A	20325	KSP-100	100	88	53	35	63	15	21.5	48.5	8	27	M8	M8
YZL-100B	20326						100							
YZL-125-M8	20330	KSP-125	125	109	62	40	80	20	20	64	10	35	M8	M8
YZL-125-M10	20331						90						M10	
YZL-150-M8	20335	KSP-150	150	133	62	40	100	15	28	75	10	30	M8	M8
YZL-150-M10	20336												M10	

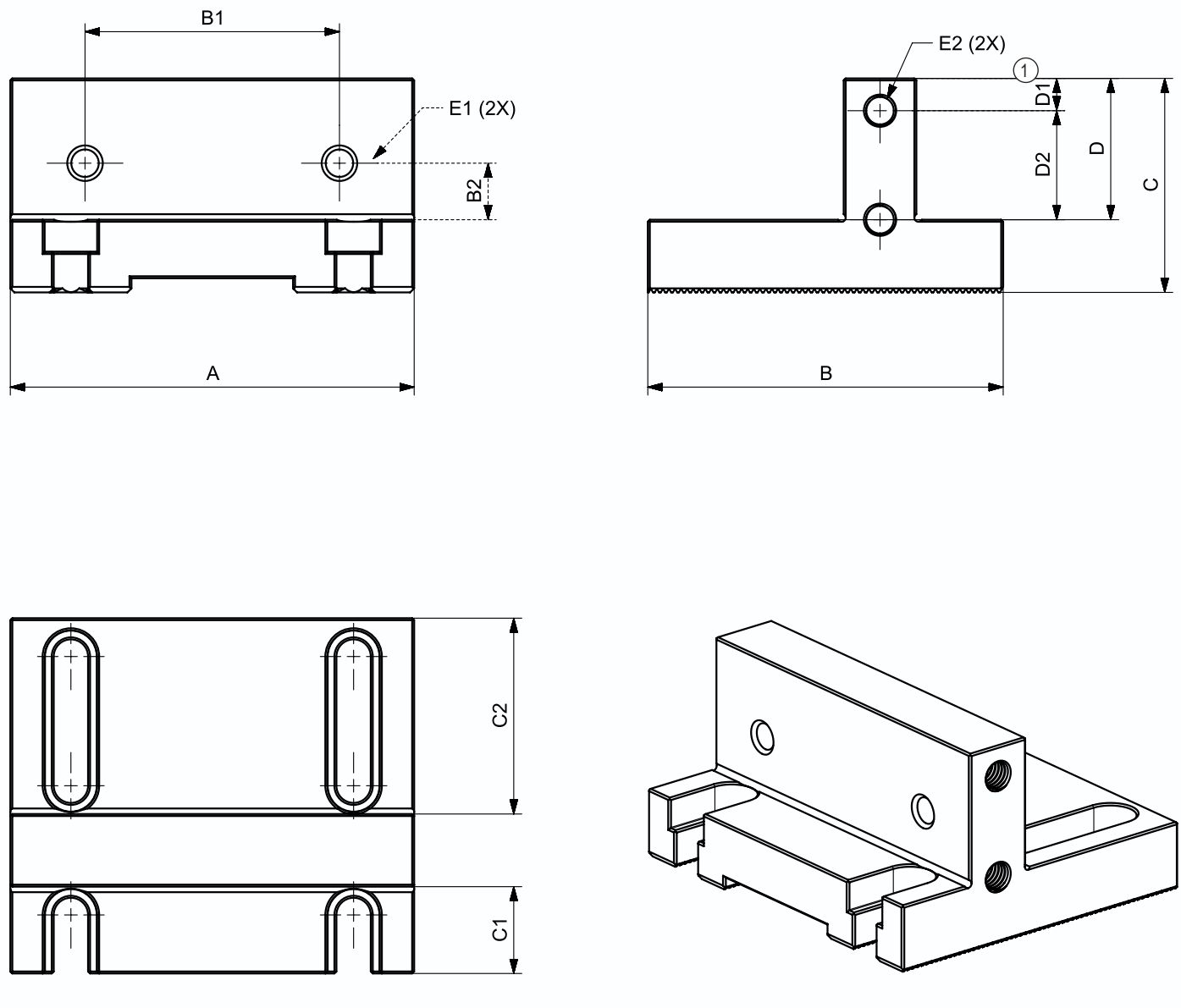

① 用于固定挡块　　①For fastening an end-stop

顶部钳口 RZ

Top Jaw Blanks RZ

材料：S45C，可硬化 | 铝合金 6061
标准：螺钉固定孔 DIN EN ISO 4762
安装：通过槽

Material: S45C, hardenable | Aluminum 6061
Version: Fastening bores for screw DIN EN ISO 4762
Mounting: Via tongue and groove

型号 Description	编号 ID	适用于 Suitable for	A [mm]	B [mm]	C [mm]	D [mm]	B1 [mm]	B2 [mm]	T1 [mm]	T2 [mm]	夹紧范围 Clamping range [mm]	重量 Weight [kg]
RZ-75A Aluminum 6061	20210	KSP-75	62.5	75	40	19	25	42.5	25	33	0-120	1.1
RZ-75S Steel S45C	20211											2.7
RZ-100A Aluminum 6061	20220	KSP-100	75	100	50	28.5	22	55	40	30	0-130	2.1
RZ-100S Steel S45C	20221											5.5
RZ-125A Aluminum 6061	20225	KSP-125	100	125	60	28.2	45	80	49	35	0-160	5.5
RZ-125S Steel S45C	20226											13
RZ-150A Aluminum 6061	20230	KSP-150	125	150	70	58	40	85	55	45	0-170	7.1
RZ-150S Steel S45C	20231											19.9

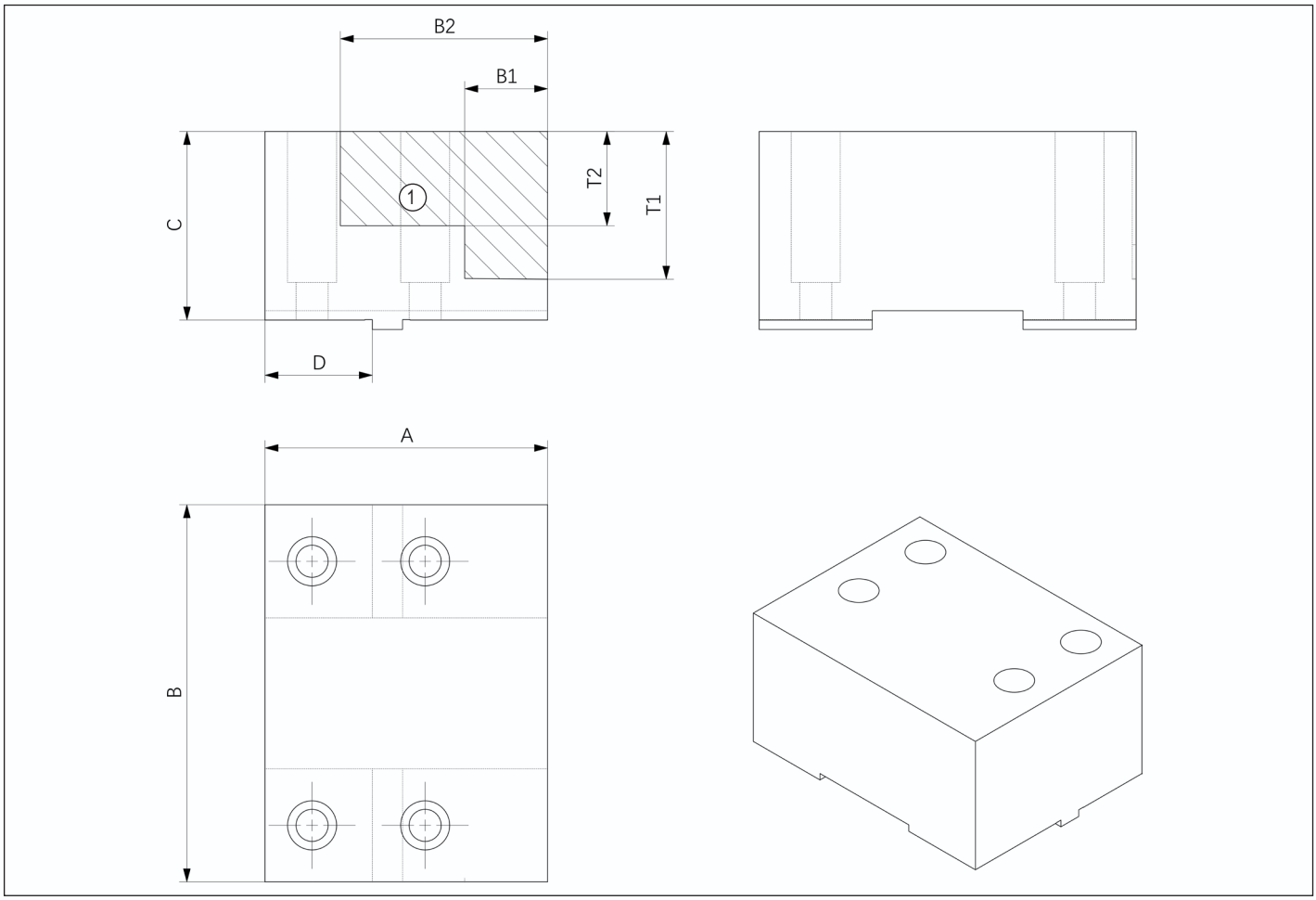

① 工作区域　　①Work surface

顶部强力钳口 YZ

Top Jaw Blanks YZ

材料：42CrMo，硬化
标准：钻孔和沉头螺钉 M6 /M8 / M10
安装：通过齿 1.5 x 60°

Material: 42CrMo, Hardened
Version: Bored and countersunk for screw M6/M8/M10
Mounting: Via fine serrations 1.5 x 60°

型号 Description	编号 ID	适用于 Suitable for	A [mm]	B [mm]	C [mm]	D [mm]	B1 [mm]	B2 [mm]	C1 [mm]	C2 [mm]	D1 [mm]	D2 [mm]	D3 [mm]	重量 Weight [kg]
YZ-75	20310	KSP-75	60	75	20.5	13	2.5	3	27.5	50	M6	9.5	7	1.2
YZ-100	20320	KSP-100	62.5	100	27	19	2.5	3	32	70	M6	8.5	8	2.1
YZ-125	20325	KSP-125	81	125	30	22	2.5	4	40	90	M8	15	11.5	3.7
YZ-150	20330	KSP-150	100	150	34.5	22	2.5	5	48	100	M10	12.5	10	5.8

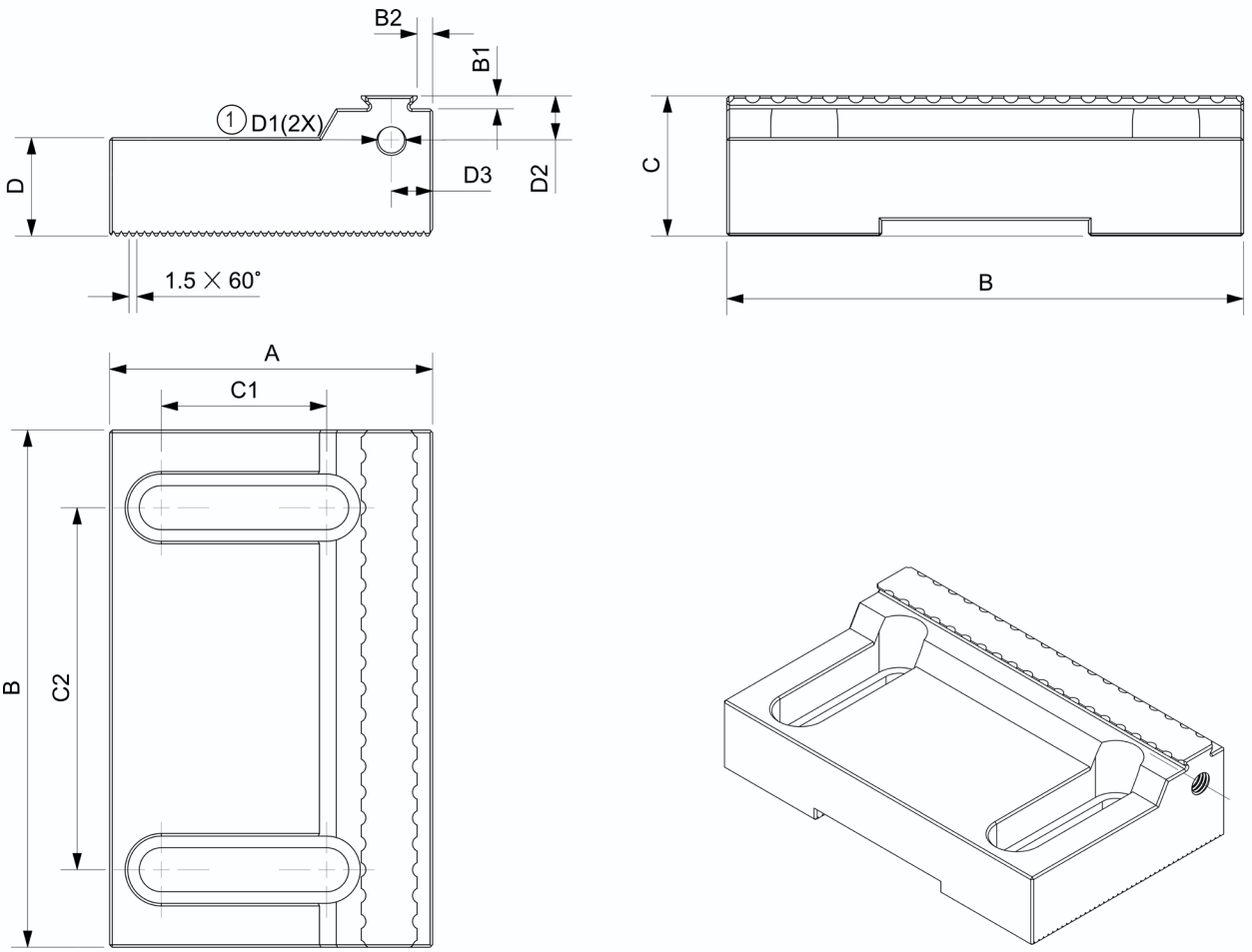

① 用于固定挡块　　①For fastening an end-stop

连接盘 FL

Flange FL

材料：S45C，可硬化
标准：螺钉固定孔 DIN EN ISO 4762
安装：通过槽

Material: S45C, hardenable
Version: Fastening bores for screw DIN EN ISO 4762
Mounting: Via tongue and groove

型号 Description	编号 ID	适用于 Suitable for	重量 Weight [kg]
FL-75	20500	KSP-75 / KSP2-75	4.8

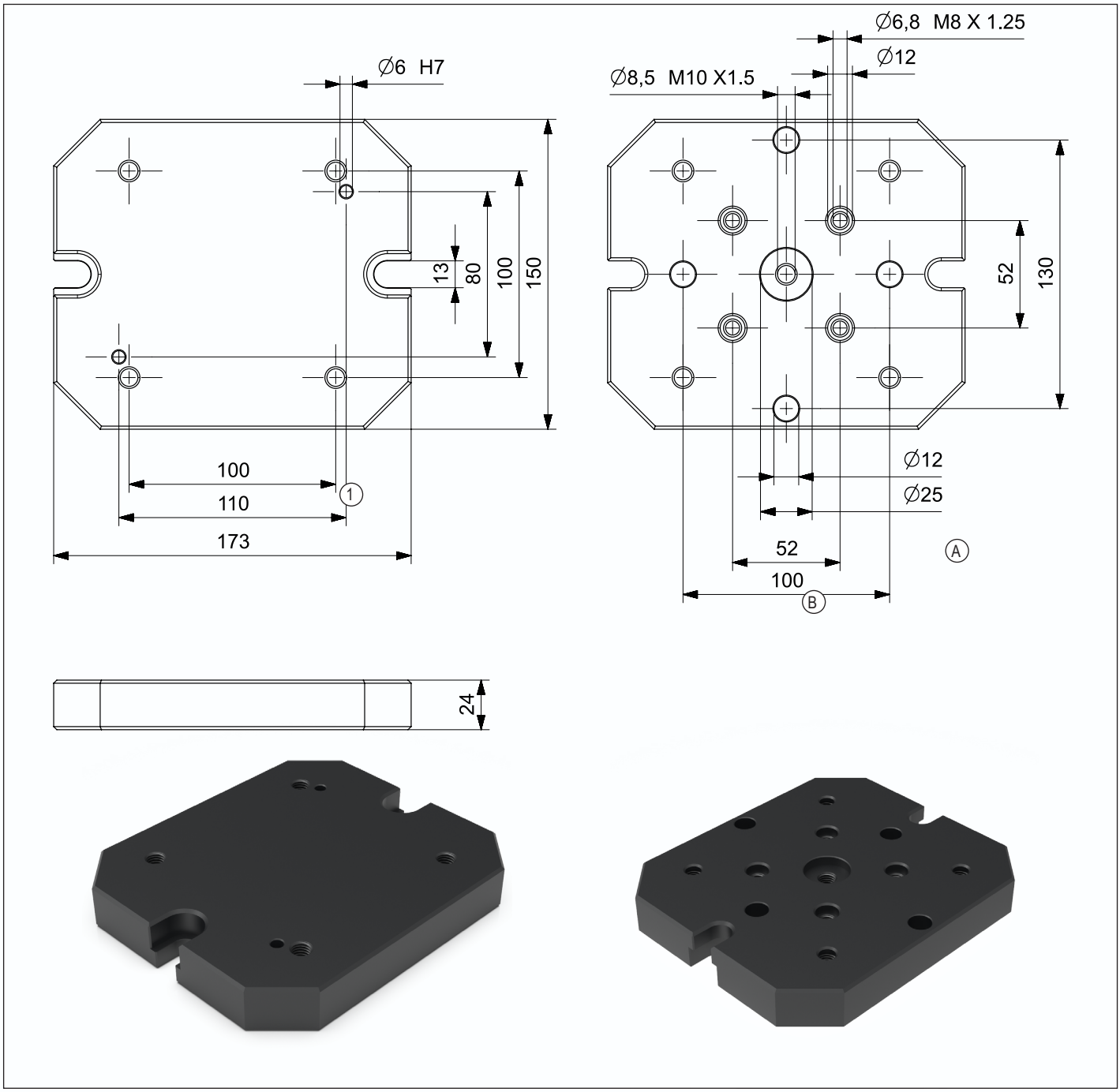

连接盘 FL

Flange FL

材料：S45C，可硬化
标准：螺钉固定孔 DIN EN ISO 4762
安装：通过槽

Material: S45C, hardenable
Version: Fastening bores for screw DIN EN ISO 4762
Mounting: Via tongue and groove

型号 Description	编号 ID	适用于 Suitable for	重量 Weight [kg]
FL-100	20502	KSP-100 / KSP2-100	5.8

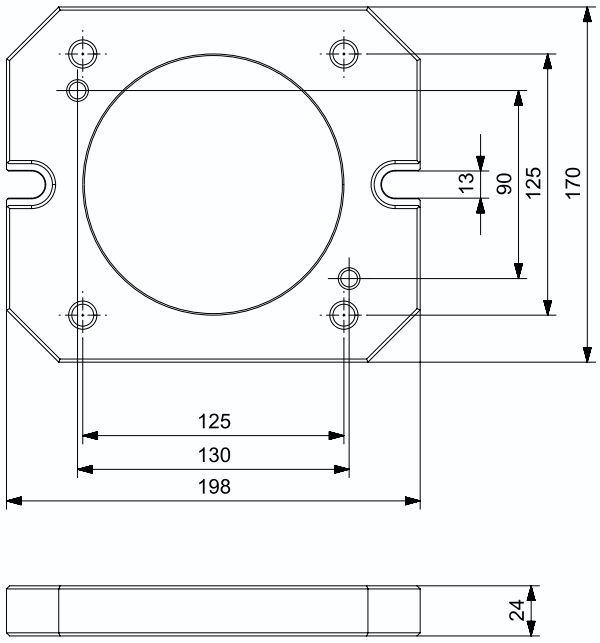

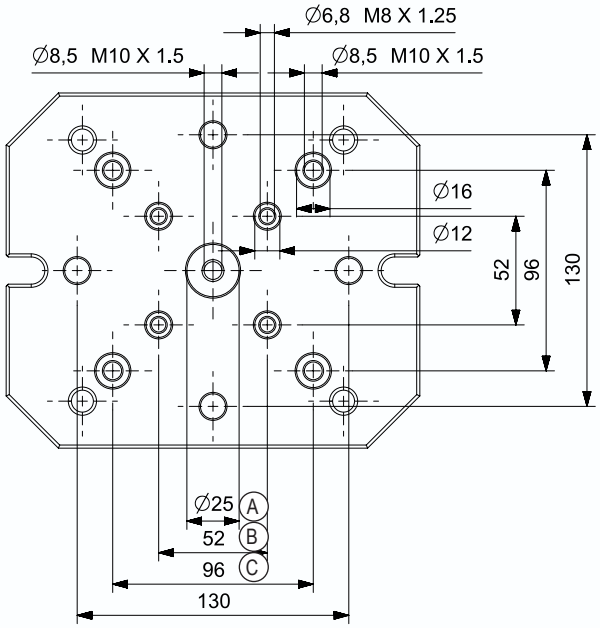

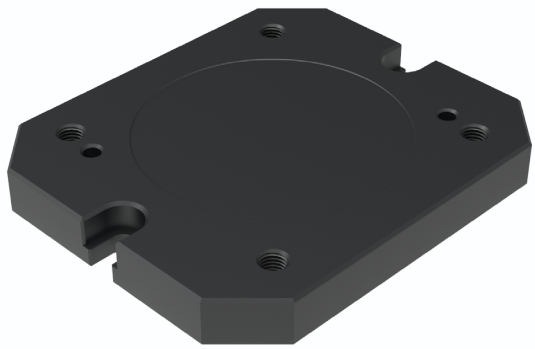

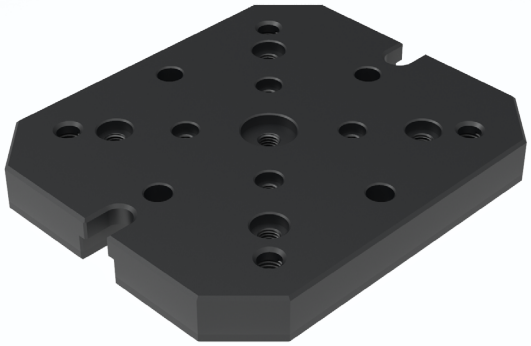

连接盘 FL

Flange FL

材料：S45C，可硬化
标准：螺钉固定孔 DIN EN ISO 4762
安装：通过槽

Material: S45C, hardenable
Version: Fastening bores for screw DIN EN ISO 4762
Mounting: Via tongue and groove

型号 Description	编号 ID	适用于 Suitable for	重量 Weight [kg]
FL-125	20504	KSP2-125	9.8

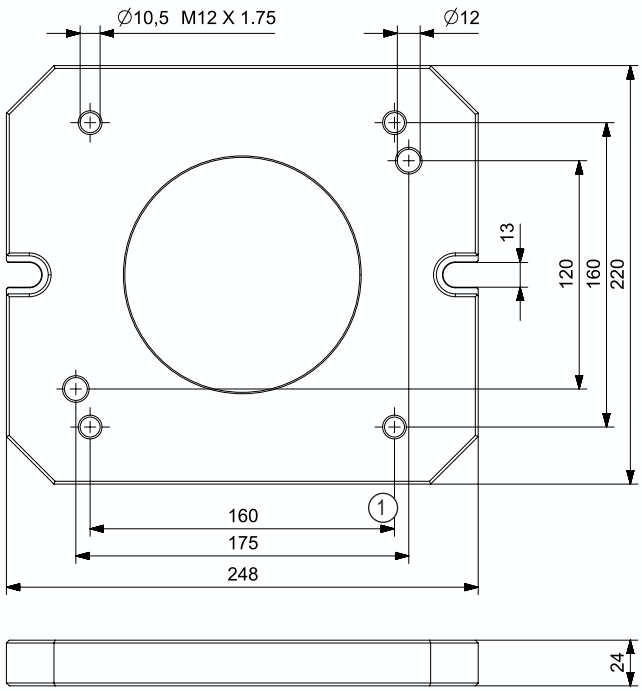

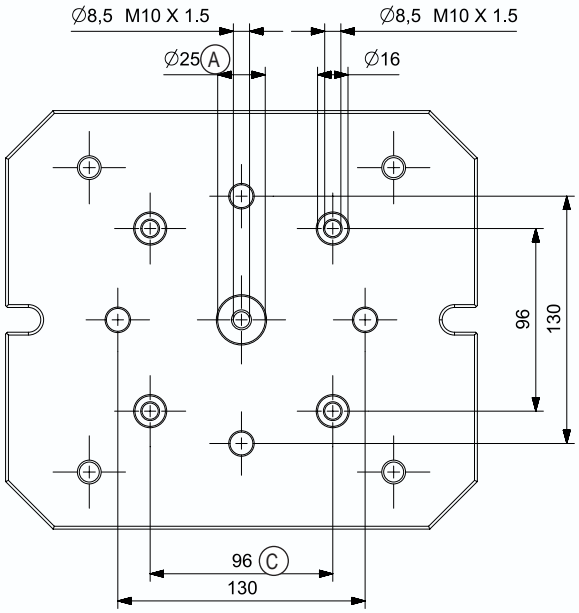

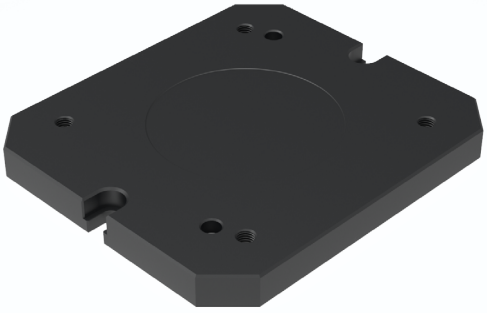

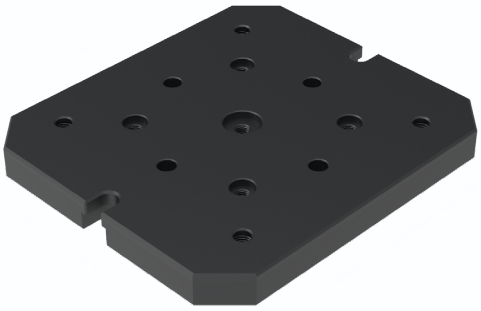

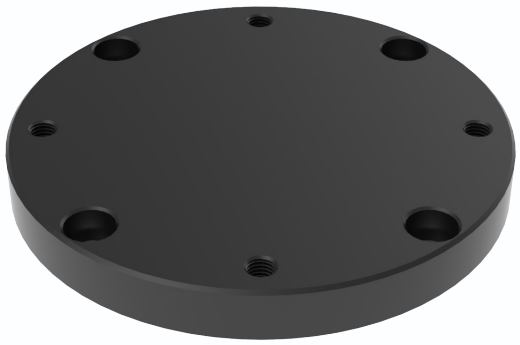

圆形连接盘 /Round flange

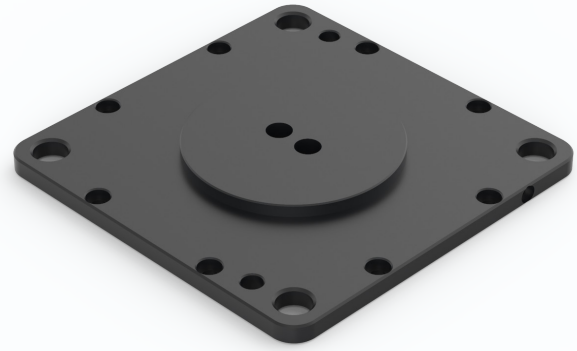

底部中心进气连接盘 / Bottom center air intake flange

RELIABLE - KSS

自定心虎钳 | Centric Clamping Vise

可靠

高的精度和高可靠性

WARWICK 手动自定心虎钳采用低高度设计，可确保高夹紧精度和稳定的夹紧力。
预张紧且无间隙的中心轴承可确保高达 ±0.02 mm 的重复精度，并仅在一个夹紧系统中实现零件的粗加工和精加工。
集成的排屑装置和特别保护的主轴提供了最大的工艺安全性和虎钳的稳定性。

RELIABLE

Maximum precision and process reliability

WARWICK manual self-centering vises are designed with a low height to ensure high clamping accuracy and stable clamping force.
The pre-tensioned and backlash-free center bearing ensures repeatability up to ±0.02 mm and enables roughing and finishing of parts in just one clamping system.
The integrated chip evacuation and specially protected spindle provide maximum process safety and vise stability.

优势 – 您的利益

低高度的设计
提升机床的空间使用率

封闭式螺杆设计
保护螺杆和简单维护的夹紧装置

高夹紧力
确保加工过程中的工艺可靠性

夹持范围大
高度的灵活性

横向引流槽
用于排出冷却液和切屑

滚珠轴承安装，无间隙主轴
最高重复精度 < ±0.02 mm

广泛的应用
适用于成品和未成品夹持

KSZ-115 接口
由于 KSZ-115 模块化系统，组合范围广泛。甚至更短的设置时间

Advantages – Your benefits

low height design
Improve machine space utilization

Enclosed Spindle
Clamping device for screw protection and simple maintenance

High clamping forces
Ensure process reliability during machining

Large clamping range
High degree of flexibility

Lateral drainage slots
For drainage of coolant and chips

Ball bearing mounted, backlash-free spindle
For highest repeat accuracies < ±0.02 mm

Wide range of applications
Suitable for machining of finished and unfinished parts

KSZ-115 interface
Versatile range of combinations due to the KSZ-115 modular system.Even shorter set-up times

RELIABLE - KSS

自定心虎钳 | Centric Clamping Vise

可靠 -KSS
技术原理

WARWICK 中心夹紧虎钳 KSS 是手动夹紧虎钳。 驱动力由密封保护的螺纹主轴提供。 力是直接产生的，没有力进行放大，并且是线性的夹紧力。 两个钳口同步打开或关闭。 带滚珠轴承的可调节中心已预加载且无游隙。夹紧力取决于扭矩。夹紧范围取决于所使用的钳口范围。

RELIABLE-KSS
Technology

WARWICK center clamping vice KSS is a manual clamping vice. The driving force is provided by the sealed main shaft. The force is generated directly, with no force amplification, and is a linear clamping force. Both jaws open or close simultaneously. Adjustable center with ball bearing preloaded and free of play. Clamping force depends on torque. The clamping range depends on the jaw range used.

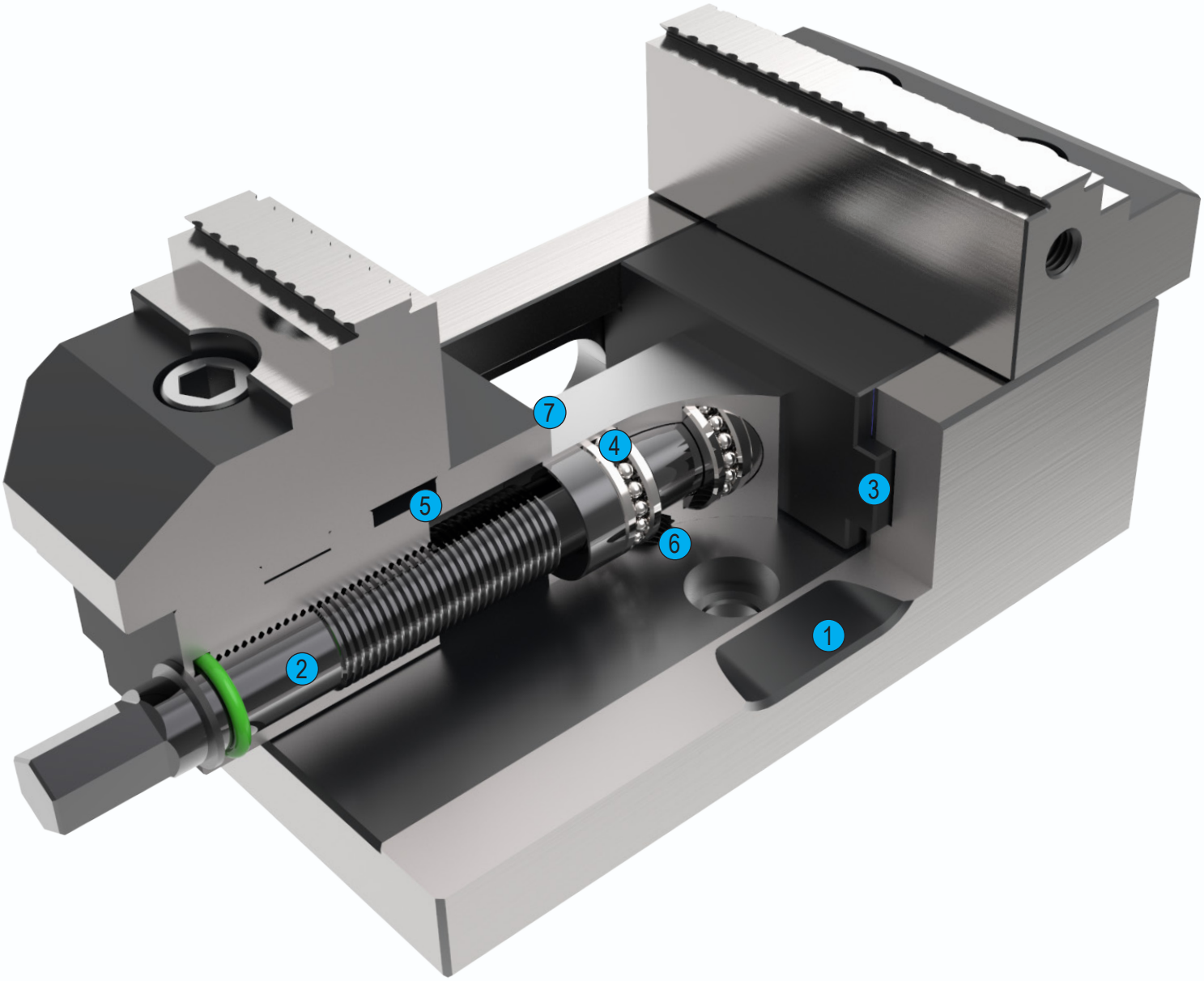

简单 = 可靠

1 排水槽
用于冷却液和切屑

2 丝杠驱动
用于最高夹持力

3 加长的滑动导轨
保证稳定和精度

4 滚珠轴承安装并调整间隙
高重复精度

5 标准钳口接口
用于 WARWICK 制造的顶爪

6 零点定位系统标准接口
KSZ-115 定位拉钉接口

7 保护丝杠的装置
提供针对冷却液和切屑的最佳保护

SIMPLE=RELIABLE

1 Drainage slots
For coolant and chips

2 Spindle drive
For highest clamping forces

3 Long jaw guidance
Extended slide rails provide guaranteed stability and precision

4 Ball bearing mounted, backlash-free spindle
For highest repeat accuracy

5 Standard jaw interface
For use of standard system and top jaws made by WARWICK

6 Applicable to zero point positioning system
KSZ-115 positioning pull nail interface

7 Double encapsulated spindle
Provides optimum protection against coolant and chips

RELIABLE - KSS100

自定心虎钳 | Centric Clamping Vise

手动自定心虎钳
含系统钳口

Concentric Clamping Vise
system jaws included

供货范围
夹钳包括系统钳口，定位销和操作手册；
不带扭矩扳手

Scope of delivery
Clamping vise include system jaw, aligning pins and operating manual;
without torque wrench

型号 Description	编号 ID	行程 Stroke/jaw [mm]	最大夹持力 Max. clamping force [kN]	最大扭矩 Max. torque [Nm]	重复精度 Repeat accuracy vise* [mm]	重量 Weight [kg]
KSS100-150	25110	20	25	100	0.02	6.5

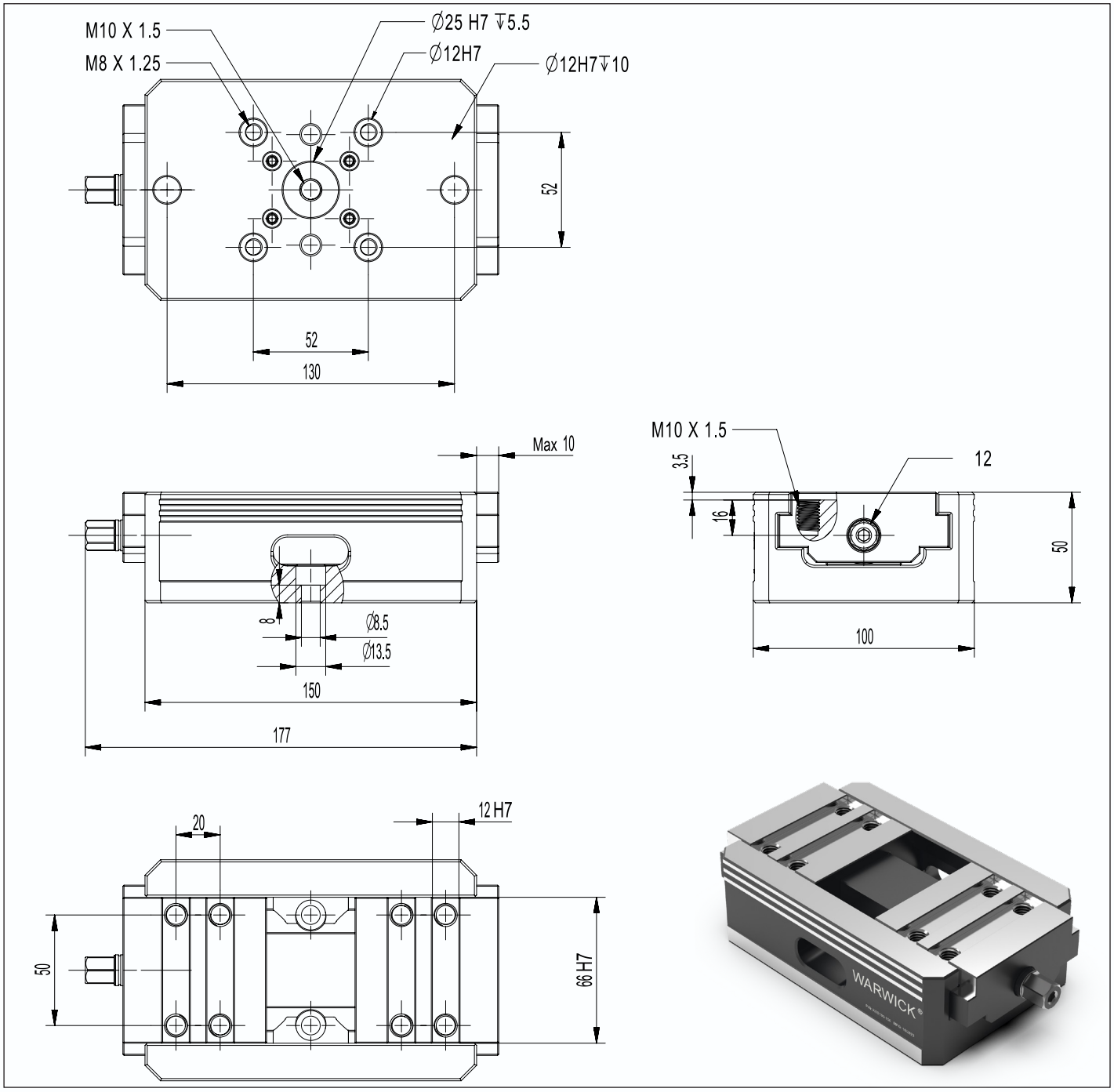

软爪夹持范围 |Soft jaw clamping range

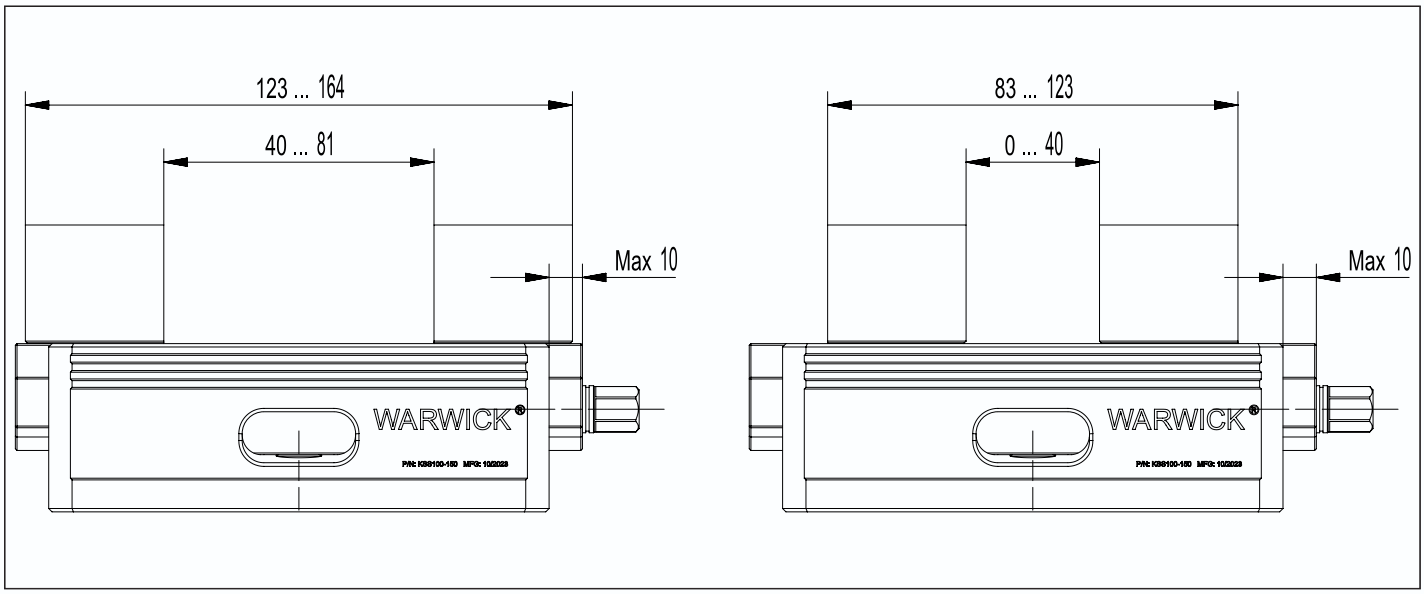

硬爪夹持范围 | Hard jaw clamping range

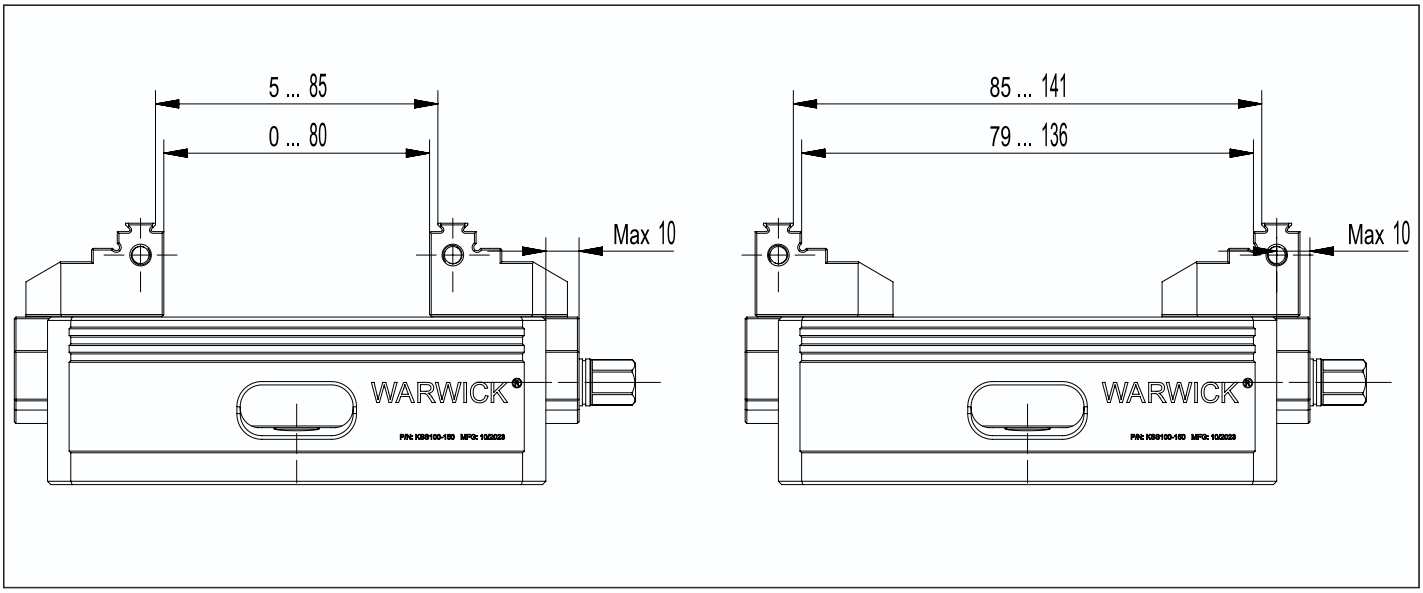

RELIABLE - KSS125

自定心虎钳 | Centric Clamping Vise

手动自定心虎钳
含系统钳口

Concentric Clamping Vise
system jaws included

供货范围
夹钳包括系统钳口，定位销和操作手册；
不带系统卡爪，不带扭矩扳手

Scope of delivery
Clamping vise include system jaw, aligning pins and operating manual;
without system jaws, without torque wrench

型号 Description	编号 ID	行程 Stroke/jaw [mm]	最大夹持力 Max. clamping force [kN]	最大扭矩 Max. torque [Nm]	重复精度 Repeat accuracy vise* [mm]	重量 Weight [kg]
KSS125-180	25120		25	100	0.02	9.5

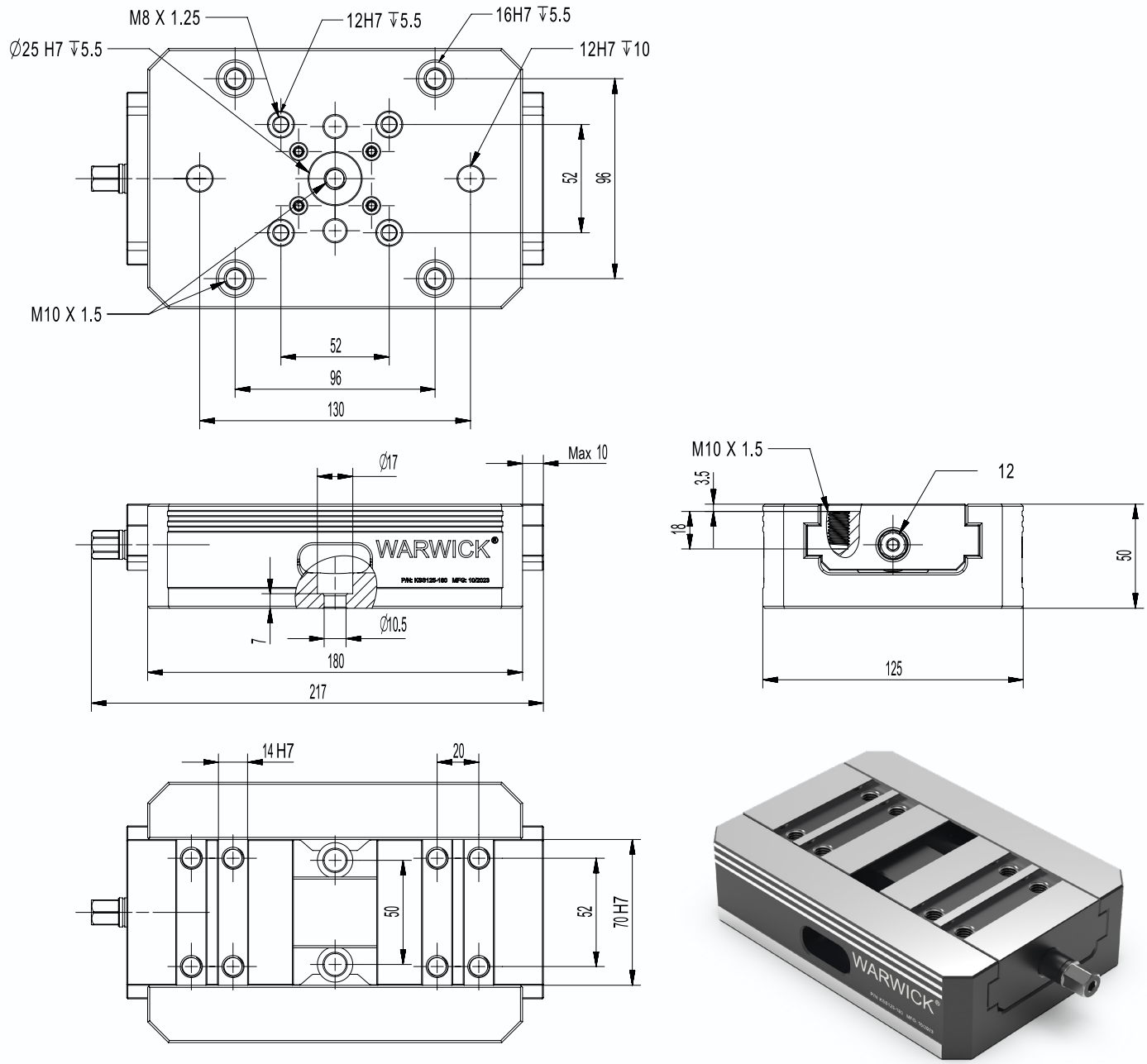

软爪夹持范围 |Soft jaw clamping range

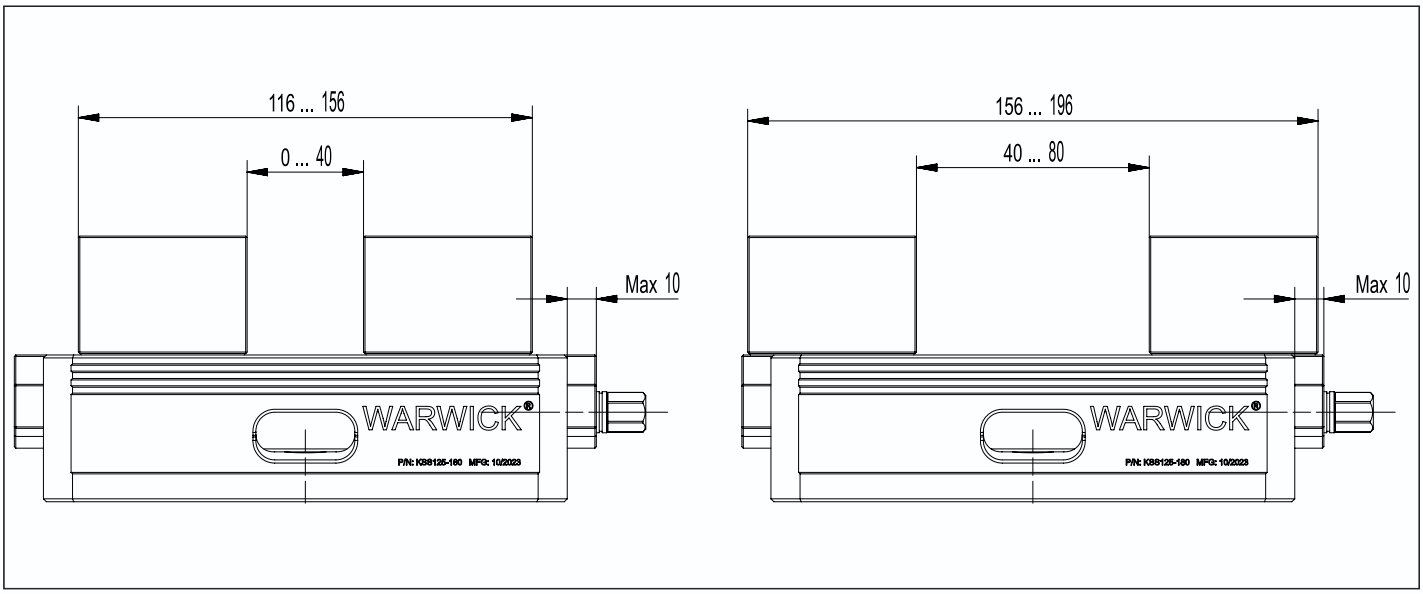

硬爪夹持范围 | Hard jaw clamping range

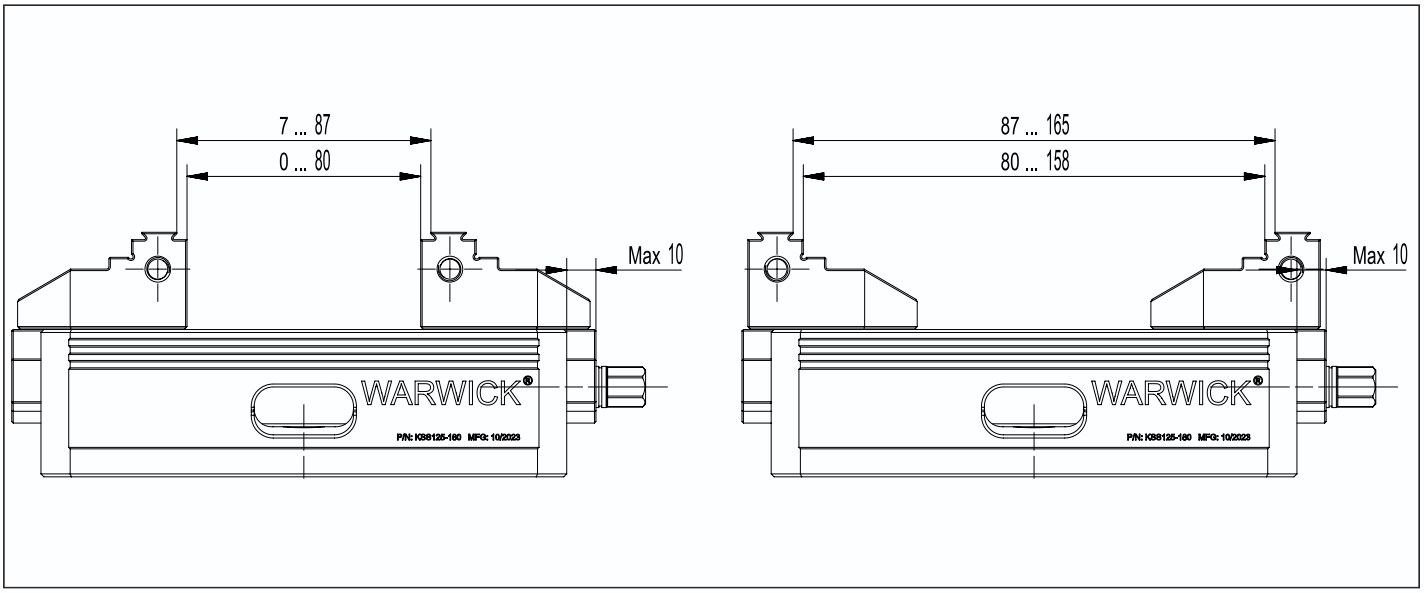

RELIABLE - KSS125

自定心虎钳 | Centric Clamping Vise

手动自定心虎钳
含系统钳口

Concentric Clamping Vise
system jaws included

供货范围
夹钳包括系统钳口，定位销和操作手册；
不带扭矩扳手

Scope of delivery
Clamping vise include system jaw,aligning pins and operating manual;
without system jaws, without torque wrench

型号 Description	编号 ID	行程 Stroke/jaw [mm]	最大夹持力 Max. clamping force [kN]	最大扭矩 Max. torque [Nm]	重复精度 Repeat accuracy vise* [mm]	重量 Weight [kg]
KSS125-300	25130	35	25	100	0.02	16.5

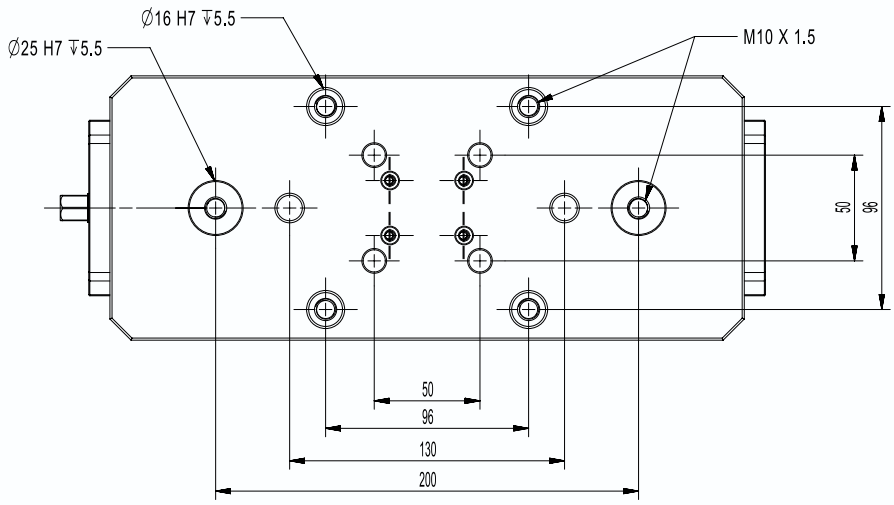

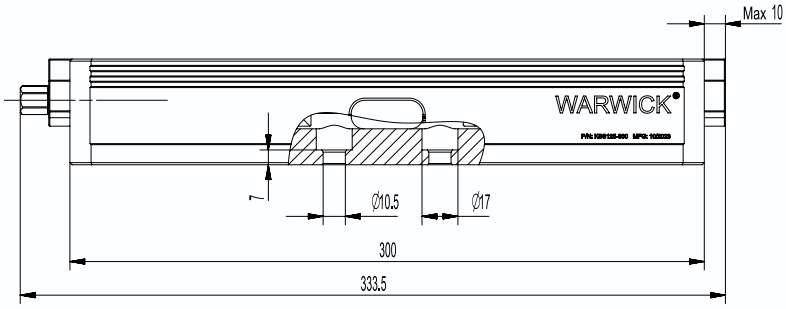

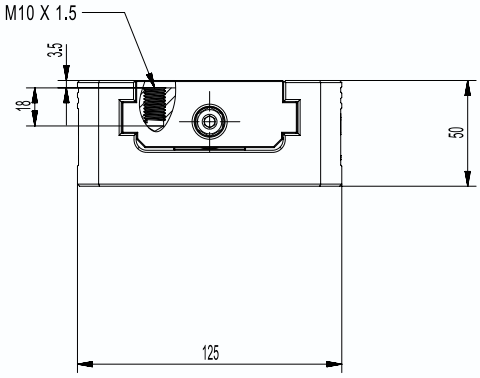

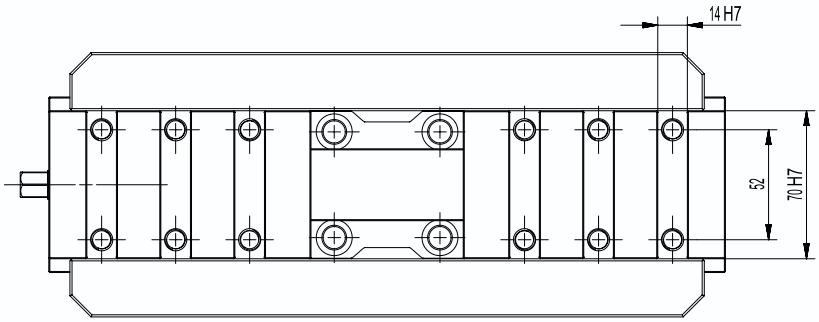

软爪夹持范围 |Soft jaw clamping range

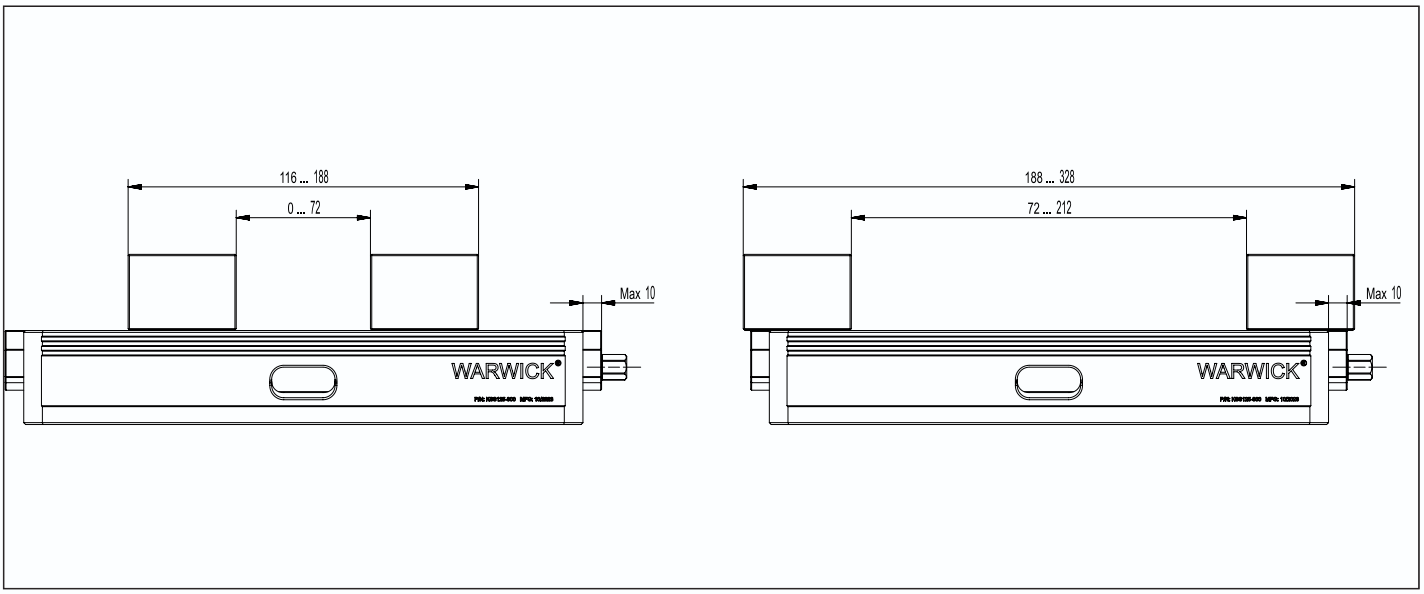

硬爪夹持范围 | Hard jaw clamping range

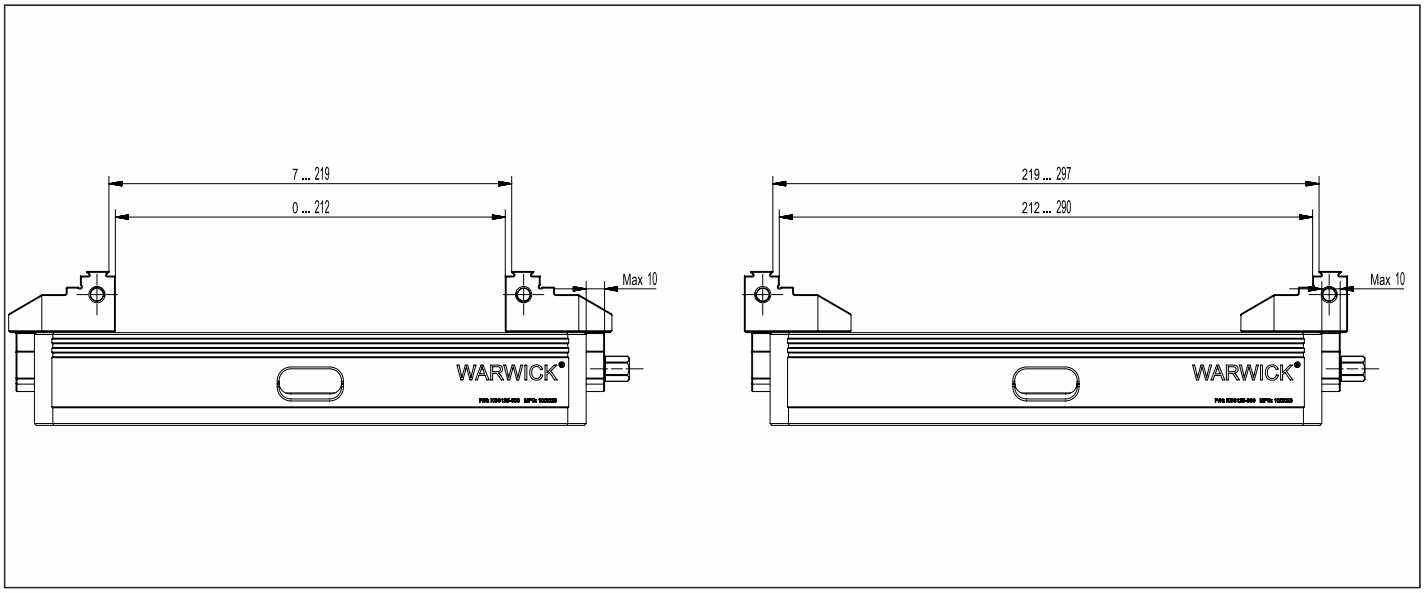

顶部钳口 YZS

Top Jaw Blanks YZS

材料：42CrMo
标准：螺钉固定孔 DIN EN ISO 4762
安装：通过槽

Material: 42CrMo
Version: Fastening bores for screw DIN EN ISO 4762
Mounting: Via tongue and groove

型号 Description	编号 ID	适用于 Suitable for	A [mm]	B [mm]	C [mm]	D [mm]	E [mm]	F [mm]	G [mm]	H [mm]	I [mm]	J [mm]	重量 Weight [kg]
YZS-100	25106	KSS-100	100	41.5	28	M6	9.5	7	2.5	2.5	50	21	1.8
YZS-125	25107	KSS-125	125	58	33	M8	12.5	10	2.5	3.5	52	29	3.2

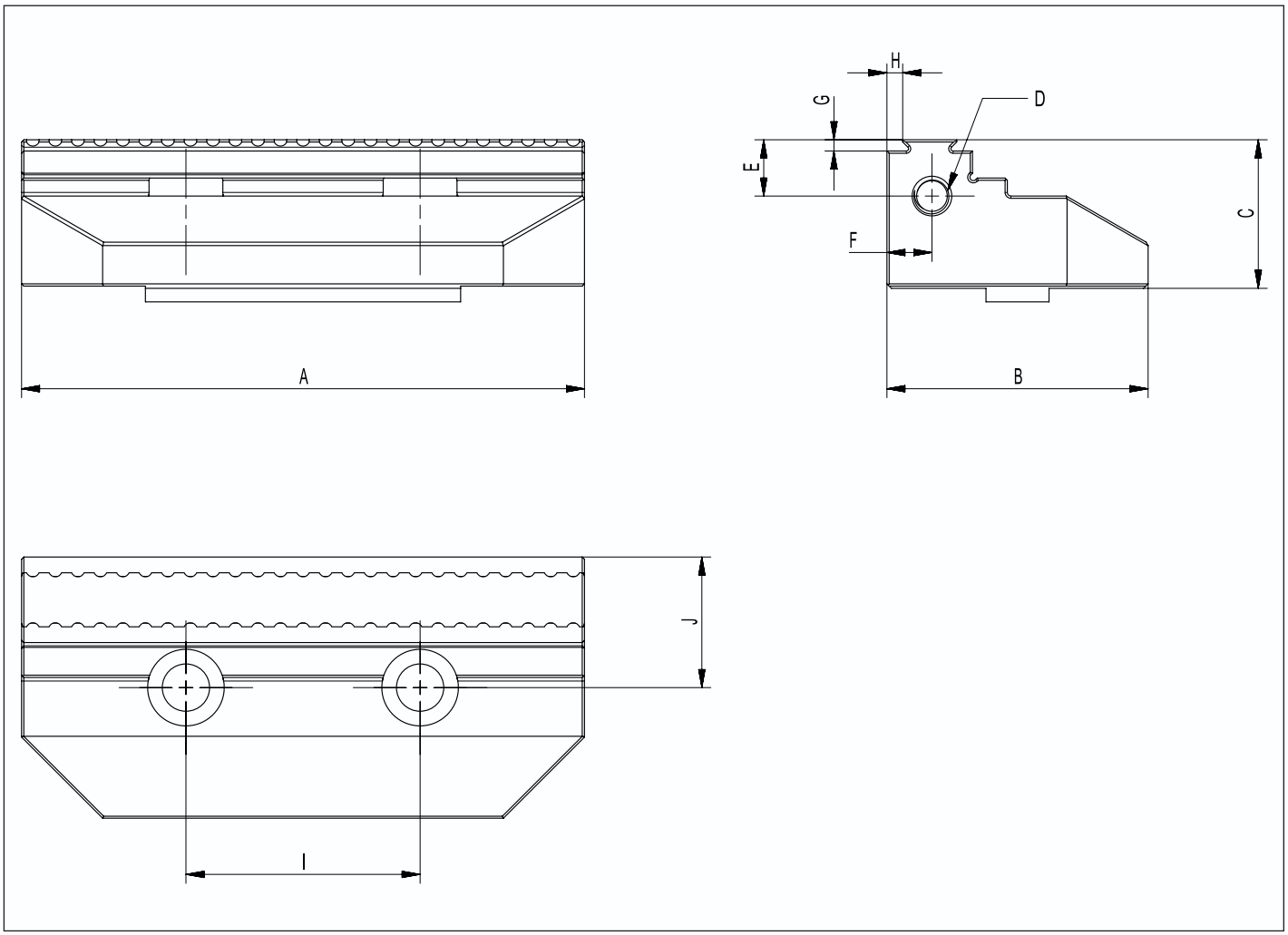

顶部钳口 RZS

Top Jaw Blanks RZS

材料：S45C，可硬化 | 铝合金 6061
标准：螺钉固定孔 DIN EN ISO 4762
安装：通过槽

Material: S45C, hardenable | Aluminum 6061
Version: Fastening bores for screw DIN EN ISO 4762
Mounting: Via tongue and groove

型号 Description	编号 ID	适用于 Suitable for	A [mm]	B [mm]	C [mm]	D [mm]	E [mm]	F [mm]	G [mm]	H [mm]	I [mm]	J [mm]	重量 Weight [kg]
RZS-100A Aluminum 6061	25100	KSS-100	100	41.5	38.25	12	66	50	18	10.5	2	9.5	1.0
RZS-100S Steel S45C	25101												2.5
RZS-125A Aluminum 6061	25102	KSS-125	125	58	43.5	14	70	52	18	10.5	3	12.5	1.8
RZS-125S Steel S45C	25103												4.5

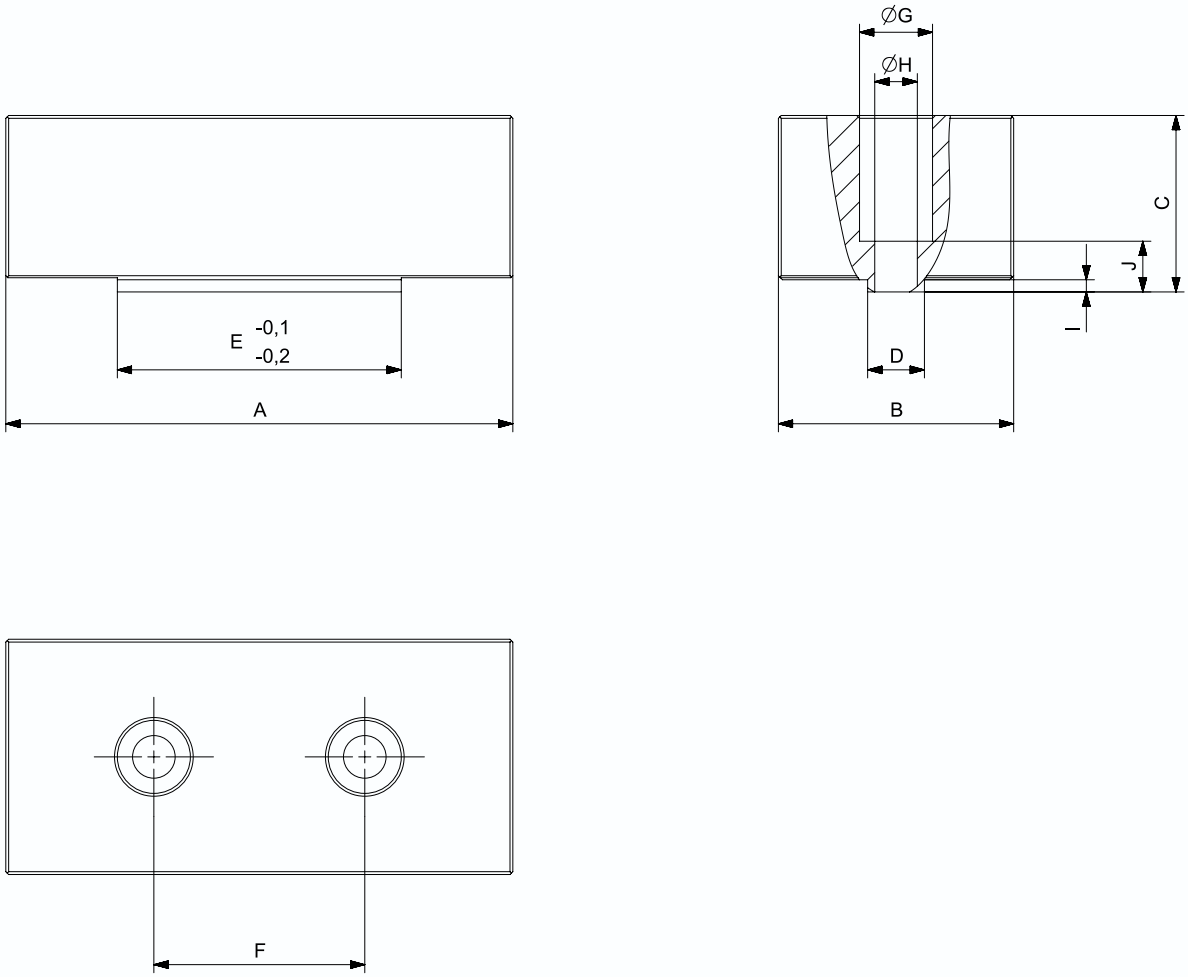

Affordable - KSF

机械夹紧系统 | Mechanical Clamping System

KSF

经济型自定心虎钳

KSF

Economical self-centering vise

经济型虎钳具备调整中心位置的功能。
集成了 KSZ 系列和 KSG 系列零点定位接口。
垂直精度：≤ 0.03/100mm
平行精度：≤ 0.01/100mm

The economy vise has the function of adjusting the center position.
The zero positioning interface of the KSZ series and the KSG series is integrated.
Vertical accuracy: ≤0.03/100mm
Parallel accuracy: ≤0.01/100mm

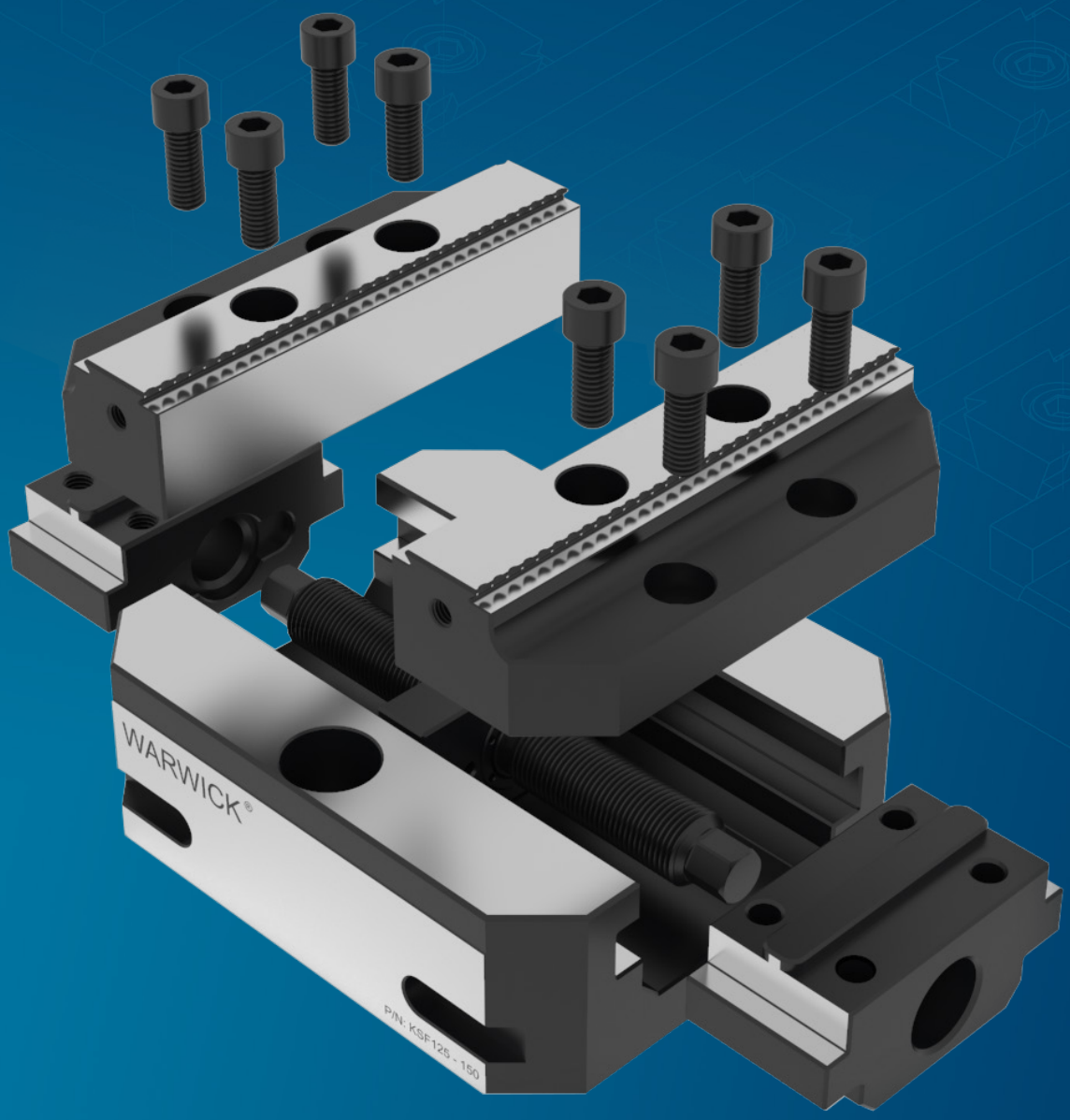

手动自定心虎钳
含系统钳口

Concentric Clamping Vise
system jaws included

供货范围
夹钳包括系统钳口，定位销和操作手册；
不带扭矩扳手

Scope of delivery
Clamping vise include system jaw,aligning pins and operating manual;
without system jaws, without torque wrench

型号 Description	编号 ID	行程 Stroke/jaw [mm]	最大夹持力 Max. clamping force [kN]	最大扭矩 Max. torque [Nm]	重复精度 Repeat accuracy vise* [mm]	重量 Weight [kg]
KSF60-100A	25300	20	13	40	0.02	2.8

KSF60-100A

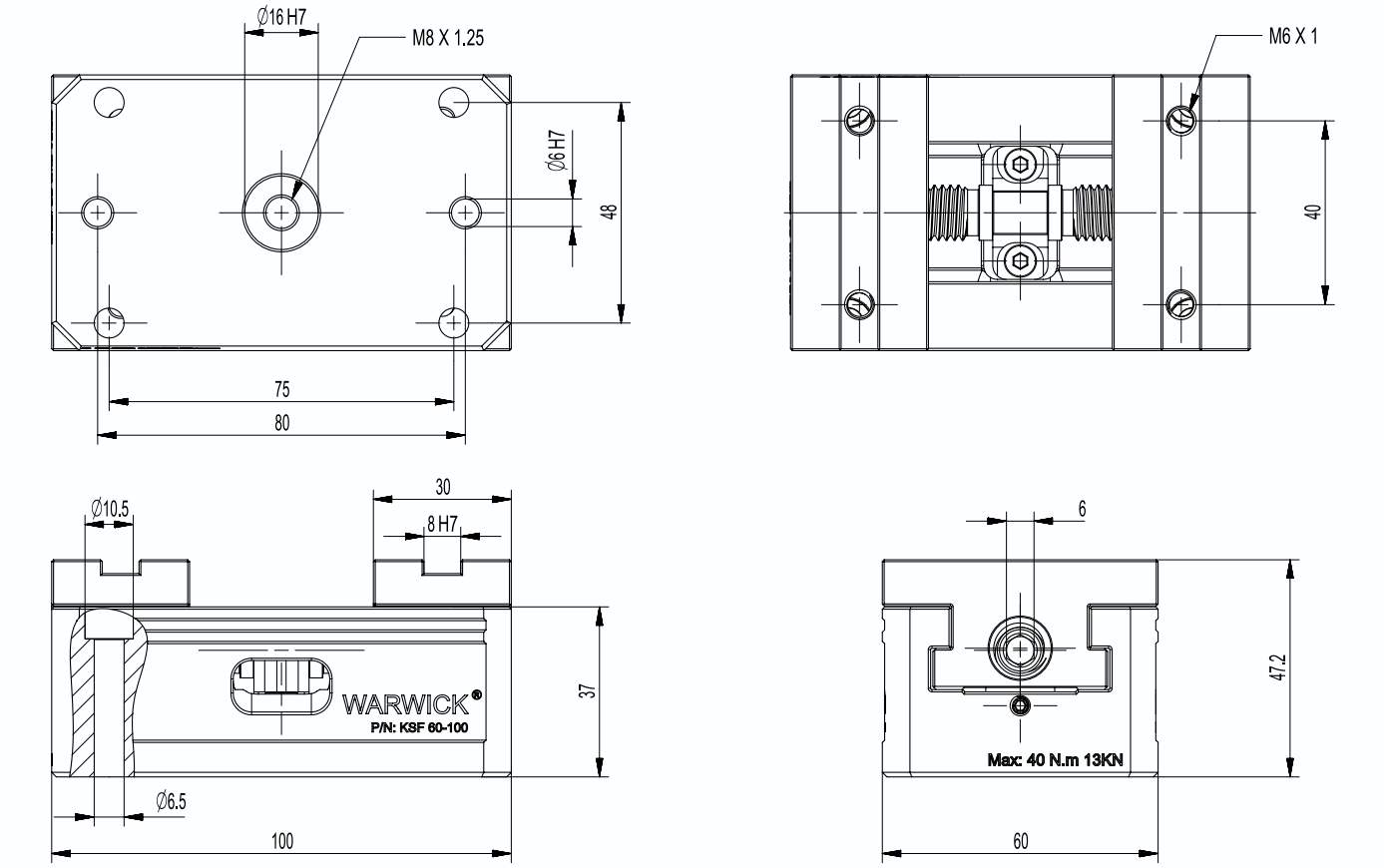

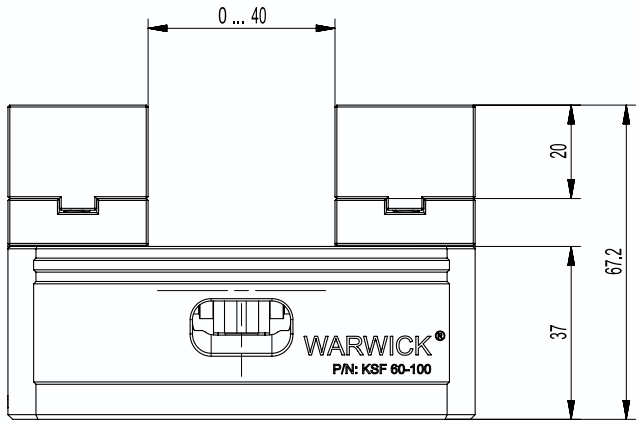

Affordable - KSF60-100B

多功能虎钳 | Multi Clamping Vise

手动自定心虎钳

含系统钳口

Concentric Clamping Vise

system jaws included

供货范围
夹钳包括系统钳口，定位销和操作手册；
不带扭矩扳手

Scope of delivery
Clamping vise include system jaw,aligning pins and operating manual;
without system jaws, without torque wrench

型号 Description	编号 ID	行程 Stroke/jaw [mm]	最大夹持力 Max. clamping force [kN]	最大扭矩 Max. torque [Nm]	重复精度 Repeat accuracy vise* [mm]	重量 Weight [kg]
KSF60-100B	25301	20	13	40	0.02	2.5

KSF60-100B

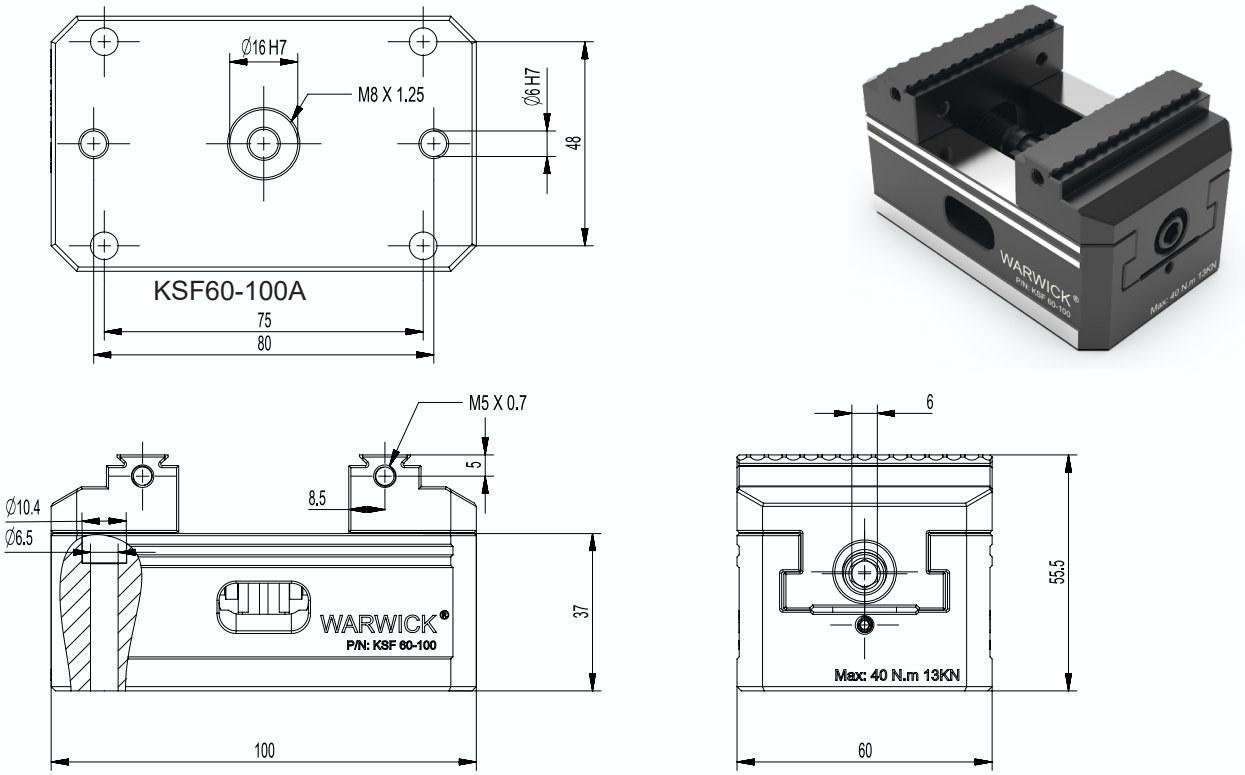

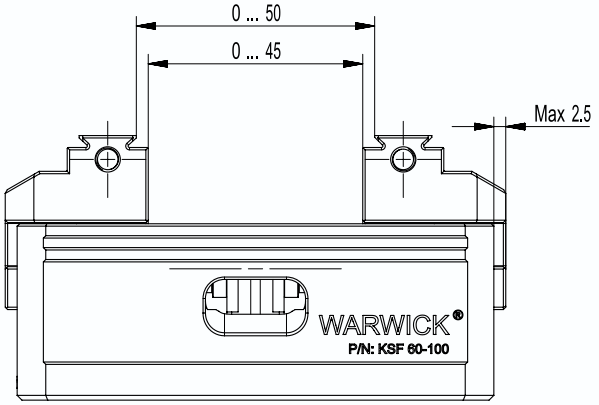

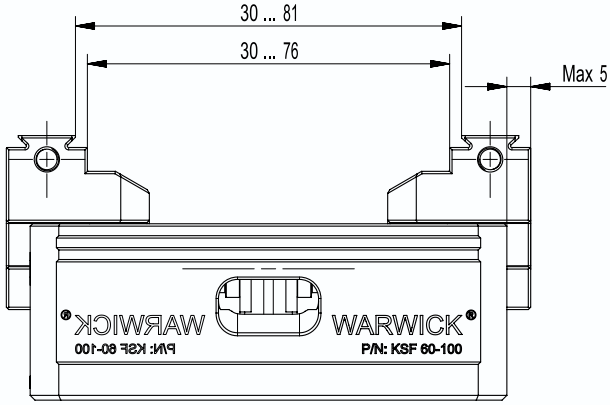

手动自定心虎钳
含系统钳口

Concentric Clamping Vise
system jaws included

供货范围
夹钳包括系统钳口，定位销和操作手册；
不带扭矩扳手

Scope of delivery
Clamping vise include system jaw,aligning pins and operating manual;
without system jaws, without torque wrench

型号 Description	编号 ID	装夹数量 Number of clamps [Pcs]	最大夹持力 Max. clamping force [kN]	最大扭矩 Max. torque [Nm]	重复精度 Repeat accuracy vise* [mm]	重量 Weight [kg]
KSF60-100A-4	25302	4	13	40	0.02	22
KSF60-100B-4	25303	4	13	40	0.02	21

KSF60-100A-4

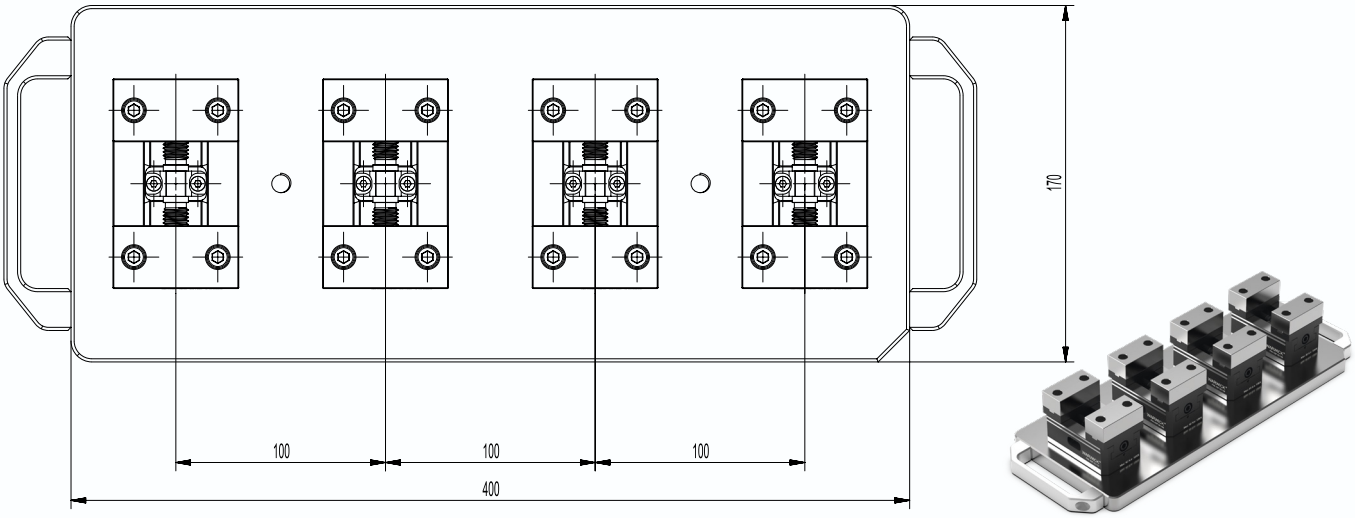

KSF60-100B-4

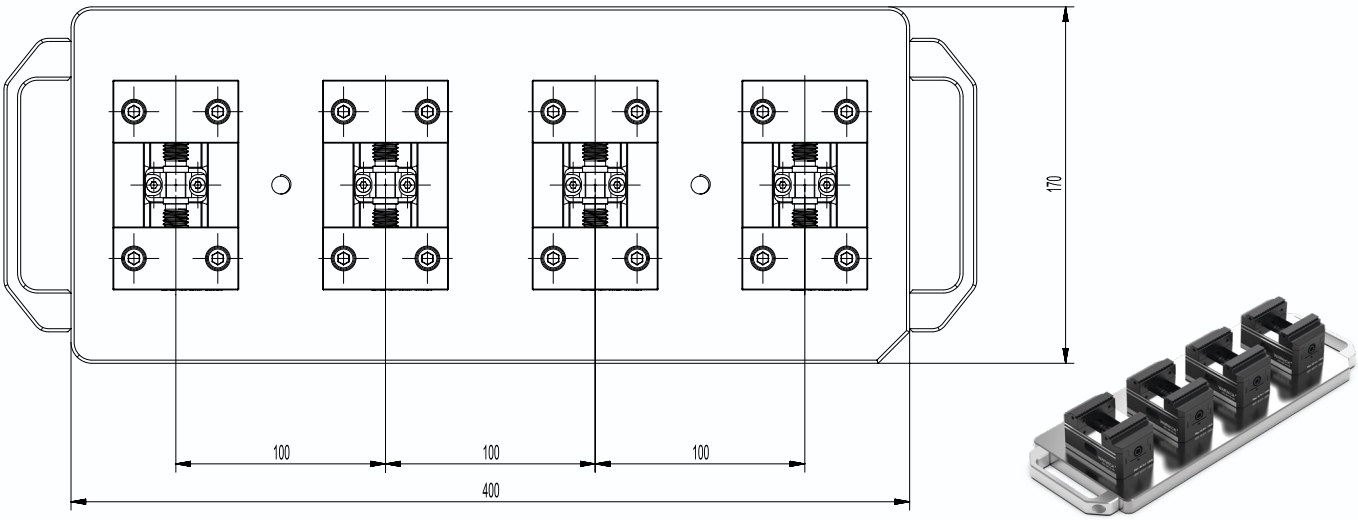

Affordable - KSF75 - 100

多功能虎钳 | Multi Clamping Vise

手动自定心虎钳
含系统钳口

Concentric Clamping Vise
system jaws included

供货范围
夹钳包括系统钳口，定位销和操作手册；
不带扭矩扳手

Scope of delivery
Clamping vise include system jaw,aligning pins and operating manual;
without system jaws, without torque wrench

型号 Description	编号 ID	行程 Stroke/jaw [mm]	最大夹持力 Max. clamping force [kN]	最大扭矩 Max. torque [Nm]	重复精度 Repeat accuracy vise* [mm]	重量 Weight [kg]
KSF 75-100	25304	-	15	70	0.02	3.5

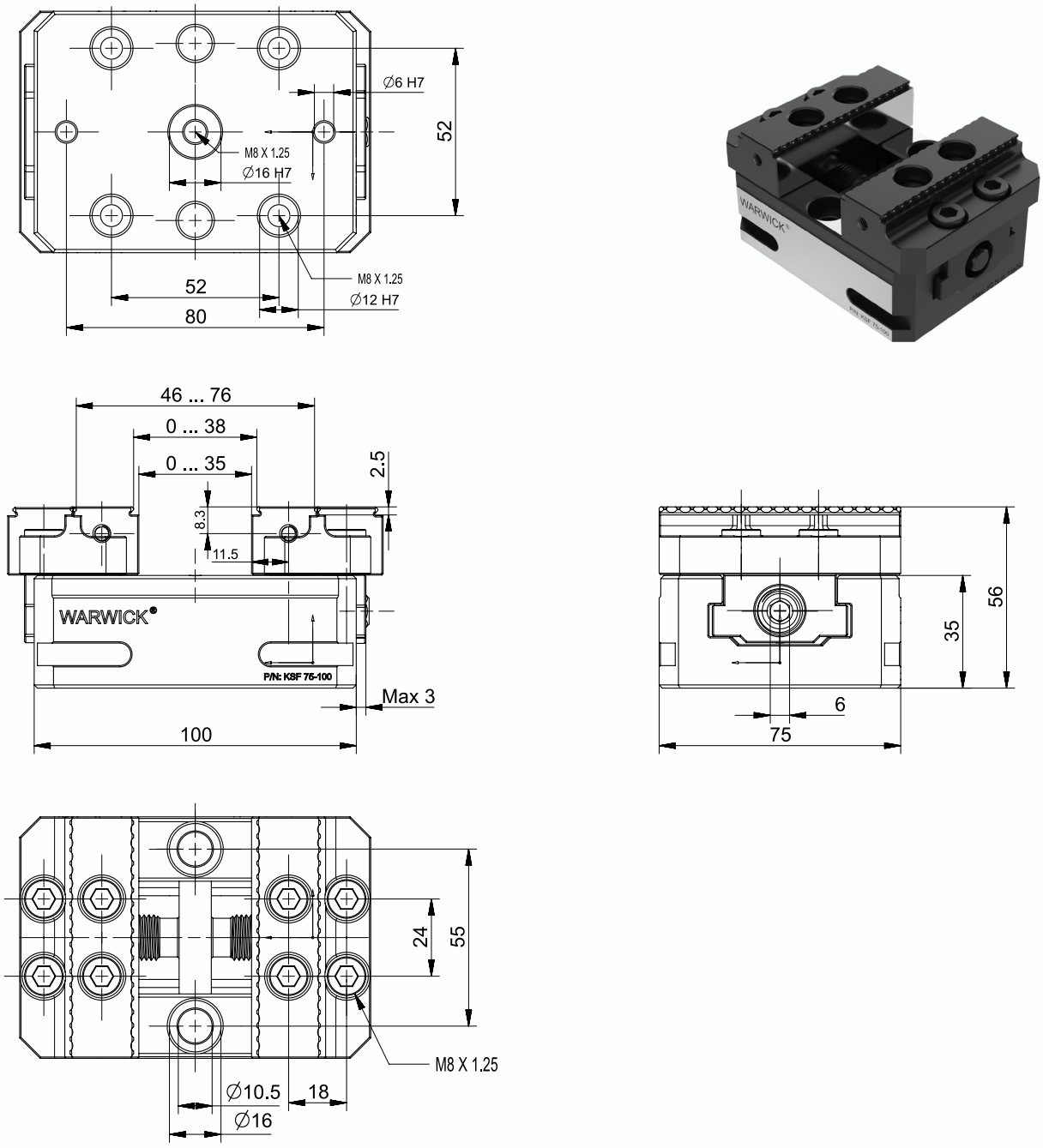

手动自定心虎钳
含系统钳口

Concentric Clamping Vise
system jaws included

供货范围
夹钳包括系统钳口，定位销和操作手册；
不带扭矩扳手

Scope of delivery
Clamping vise include system jaw,aligning pins and operating manual;
without system jaws, without torque wrench

型号 Description	编号 ID	行程 Stroke/jaw [mm]	最大夹持力 Max. clamping force [kN]	最大扭矩 Max. torque [Nm]	重复精度 Repeat accuracy vise* [mm]	重量 Weight [kg]
KSF 75-130	25305	-	15	70	0.02	4.8

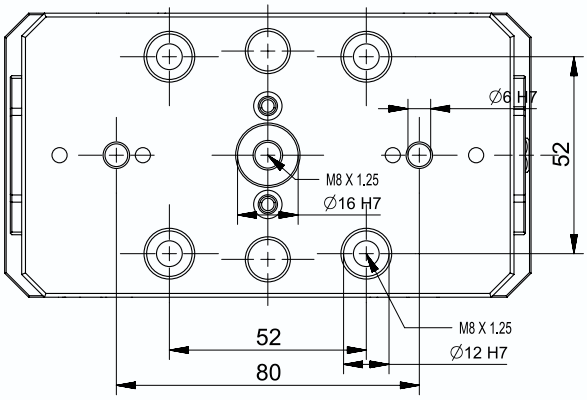

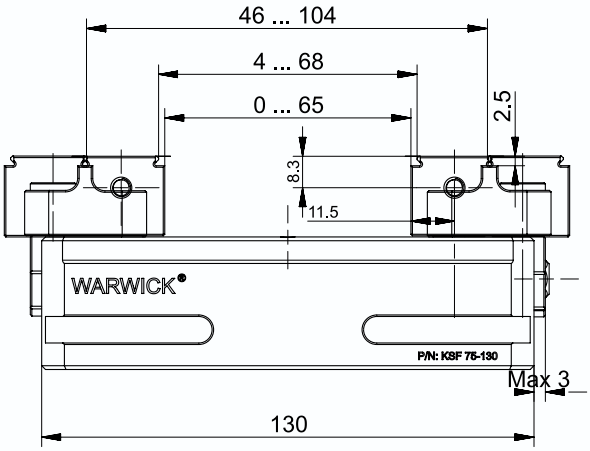

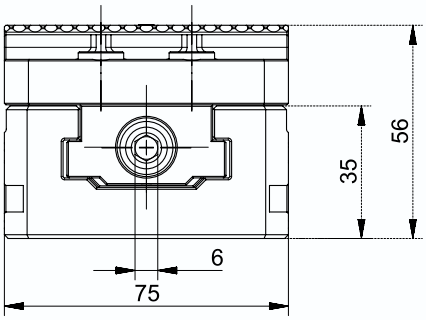

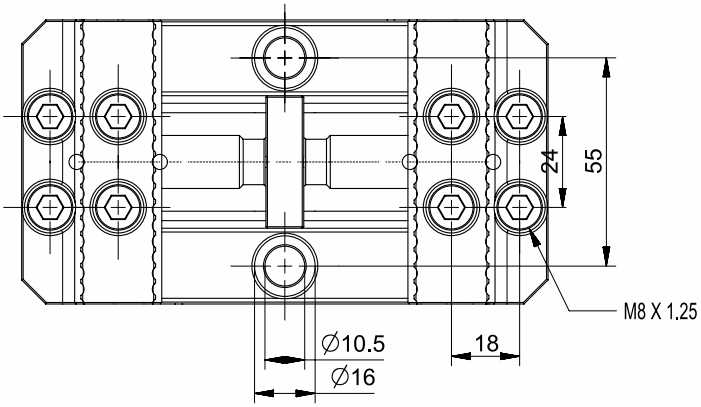

Affordable - KSF125 - 150

多功能虎钳 | Multi Clamping Vise

手动自定心虎钳

含系统钳口

Concentric Clamping Vise

system jaws included

供货范围
夹钳包括系统钳口，定位销和操作手册；
不带扭矩扳手

Scope of delivery
Clamping vise include system jaw,aligning pins and operating manual;
without system jaws, without torque wrench

型号 Description	编号 ID	行程 Stroke/jaw [mm]	最大夹持力 Max. clamping force [kN]	最大扭矩 Max. torque [Nm]	重复精度 Repeat accuracy vise* [mm]	重量 Weight [kg]
KSF125-150	25306	-	20	100	0.02S	7.64

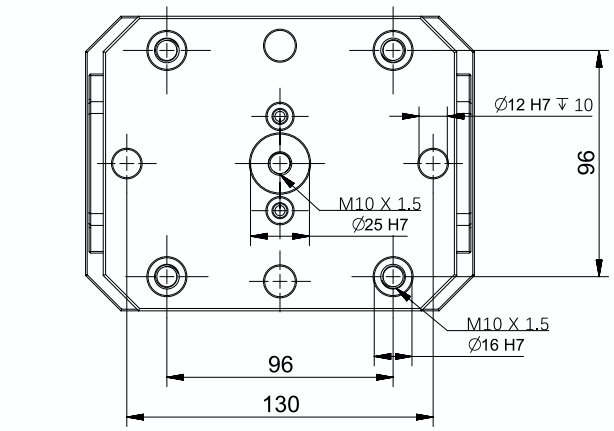

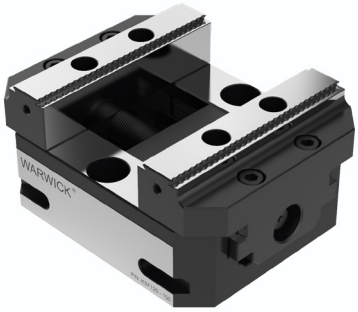

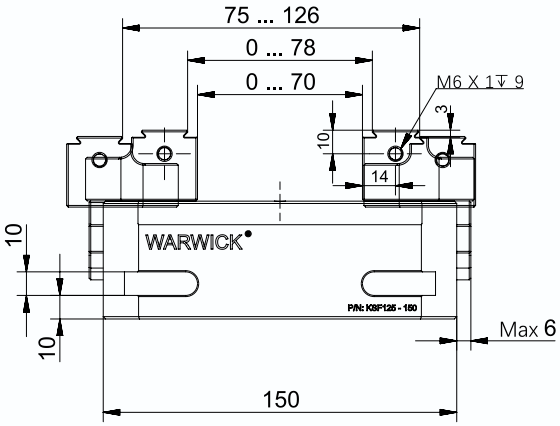

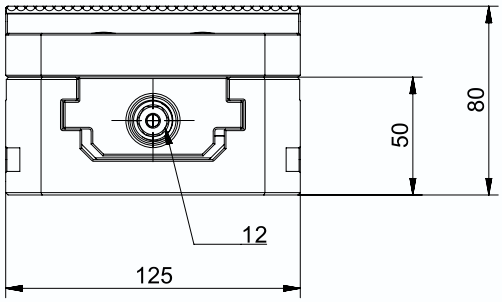

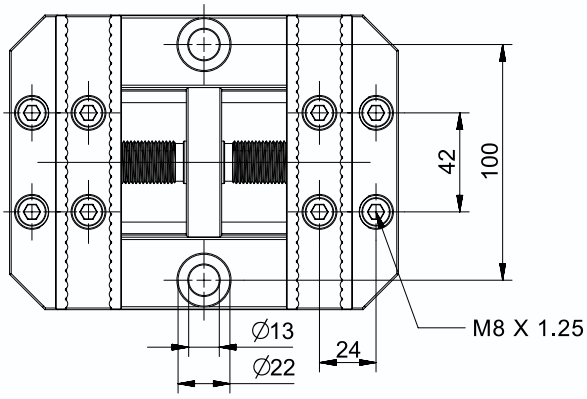

手动自定心虎钳
含系统钳口

Concentric Clamping Vise
system jaws included

供货范围
夹钳包括系统钳口，定位销和操作手册；
不带扭矩扳手

Scope of delivery
Clamping vise include system jaw,aligning pins and operating manual;
without system jaws, without torque wrench

型号 Description	编号 ID	行程 Stroke/jaw [mm]	最大夹持力 Max. clamping force [kN]	最大扭矩 Max. torque [Nm]	重复精度 Repeat accuracy vise* [mm]	重量 Weight [kg]
KSF125-250	25307	-	20	100	0.02	10.8

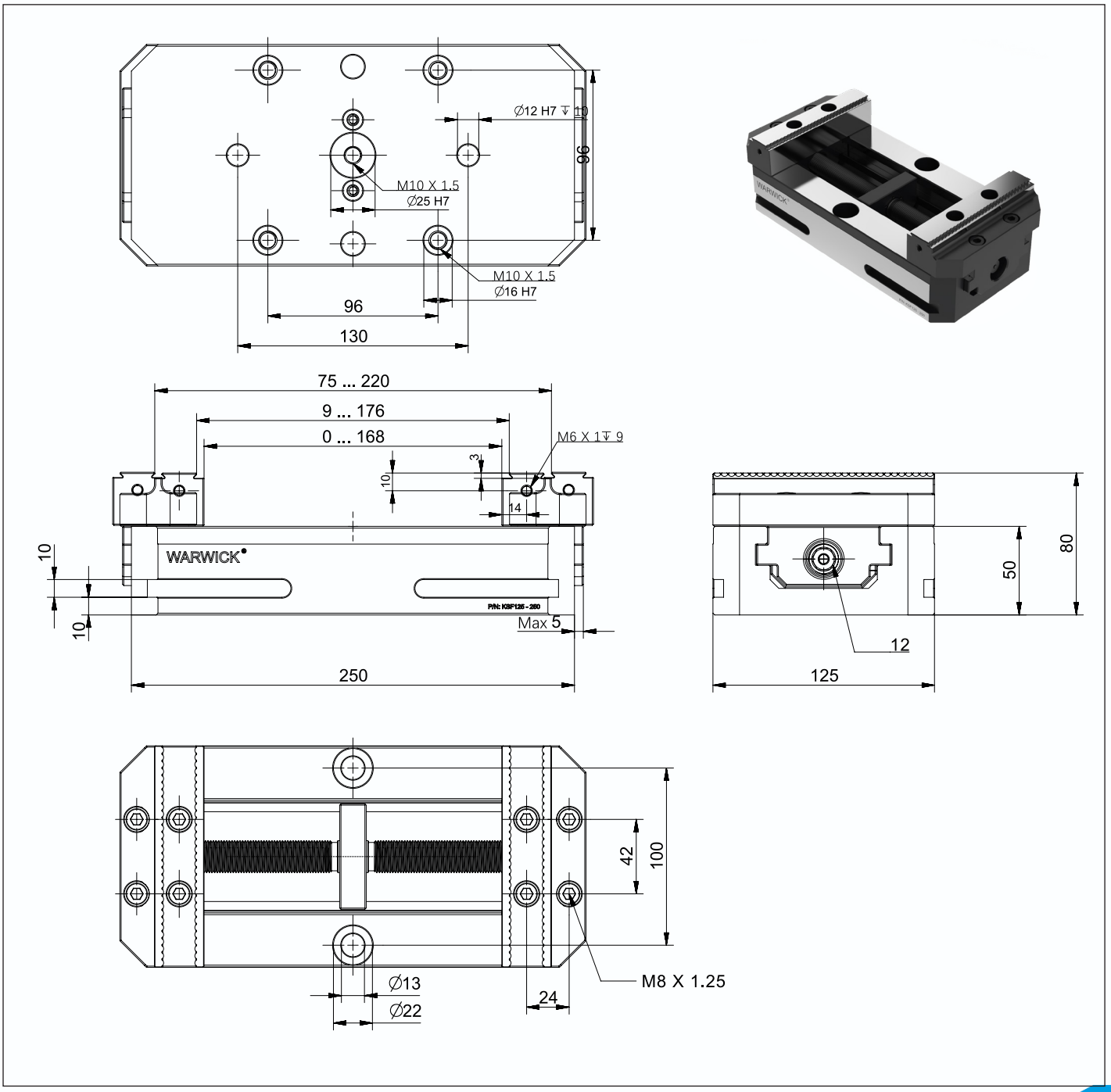

Affordable - KSD

多功能虎钳 | Multi Clamping Vise

便宜 -KSD

多工位虎钳
磨齿工艺，表面硬化处理，极高的位置精度。

应用于 SIMPLE-KSZ 系统，将展现出近乎完美的交换位置精度。

灵活的调整范围，极高的重复位置精度，极大的降低了停机时间和换刀次数。

Affordable-KSD

Multi-station vice
Grinding process, surface hardening treatment, extremely high position accuracy.

Applied to the SIMPLE-KSZ system, it will exhibit near-perfect exchange position accuracy.

Flexible adjustment range and high repeat position accuracy greatly reduce downtime and tool changes.

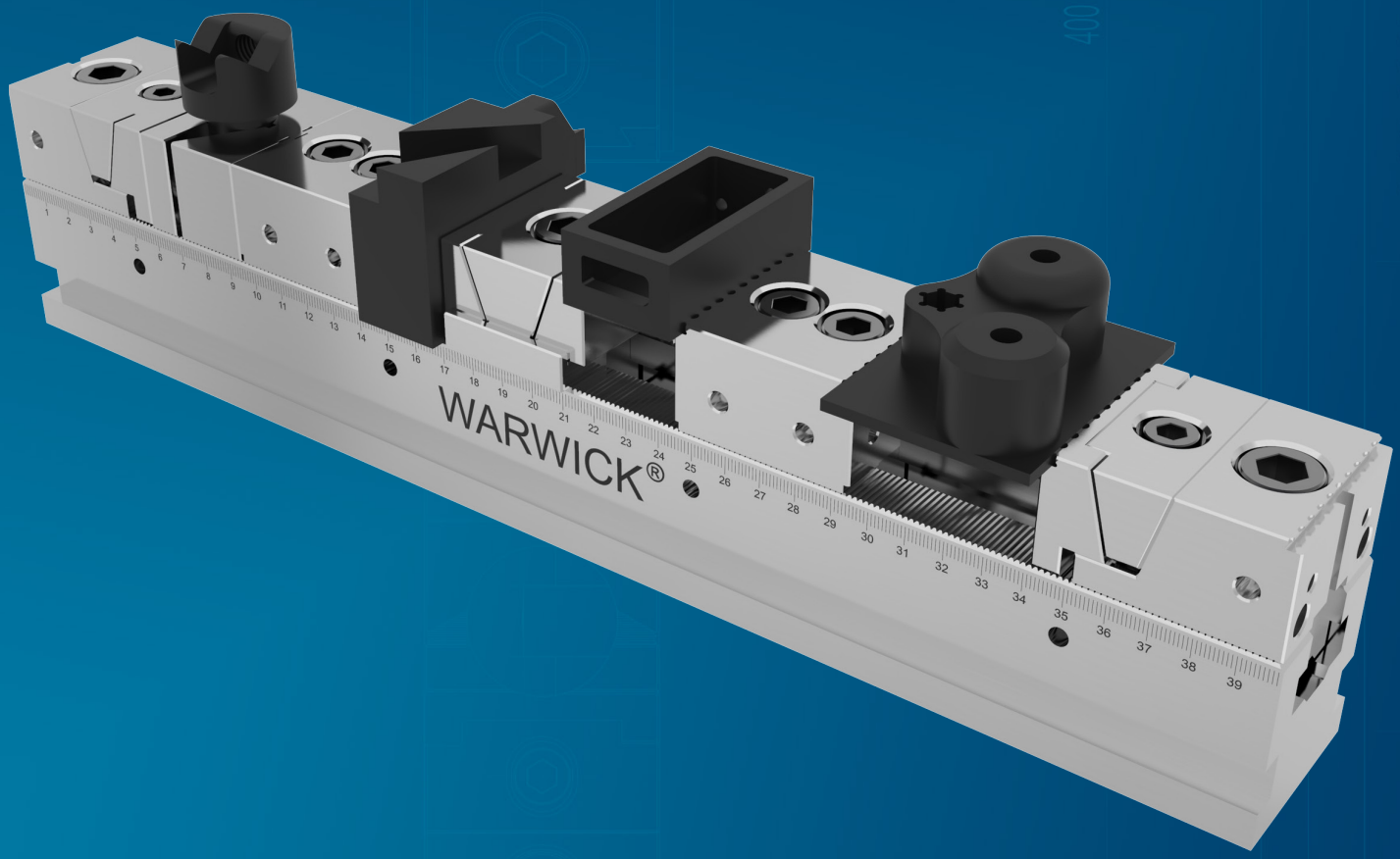

优势 – 您的利益

硬化的齿
保证精度和位置稳定性

激光蚀刻尺
快速精确的预调整

多个夹紧底座的组合
具备高度灵活性

极高的装载密度
产生极高的经济性

很长的卡盘钳口底座导轨
对新的夹紧任务进行最佳调整

多个夹紧虎钳
只需要一个操纵键即可

SIMPLE-KSZ 接口
SIMPLE-KSZ 模块化系统可实现多种组合。 设置时间更短

定义夹紧力
夹紧力是在最大压力和最大扭矩下，在卡盘爪上的各个力的算术总和。

Advantages – Your benefits

Hardened and ground serration
For maximum precision and form stability

Laser-etched ruler
Quick and precise preadjustment

Combination of several clamping rails
High degree of flexibility

Extremely high loading density
For economical machining

Vast chuck jaw program
Optimal adjustment to new clamping tasks

Only one actuation key is necessary for the multiple clamping vise Optimal operator convenience

SIMPLE-KSZ interface
Versatile range of combinations due to the SIMPLE-KSZ modular system. Even shorter set-up times

Definition clamping force
The clamping force is the arithmetic sum of the various forces on the chuck jaws under the maximum pressure and maximum torque.

技术原理

钳口可通过锯齿系统定位在导轨上。带有激光标记的直尺确保将钳口快速均匀地放置在导轨上。可上下移动的下压块驱动钳口以实现夹紧。调节爪和固定爪的侧螺纹用作安装工件的定位挡板。

Technology

The movable jaw can be positioned on the guide rail by a serration system. The ruler with laser marking ensures that the jaws are quickly and evenly placed on the rail. The movable pressure block drives the jaws to achieve clamping. The side threads of the adjusting claw and the fixing claw are used as a positioning baffle for installing the workpiece.

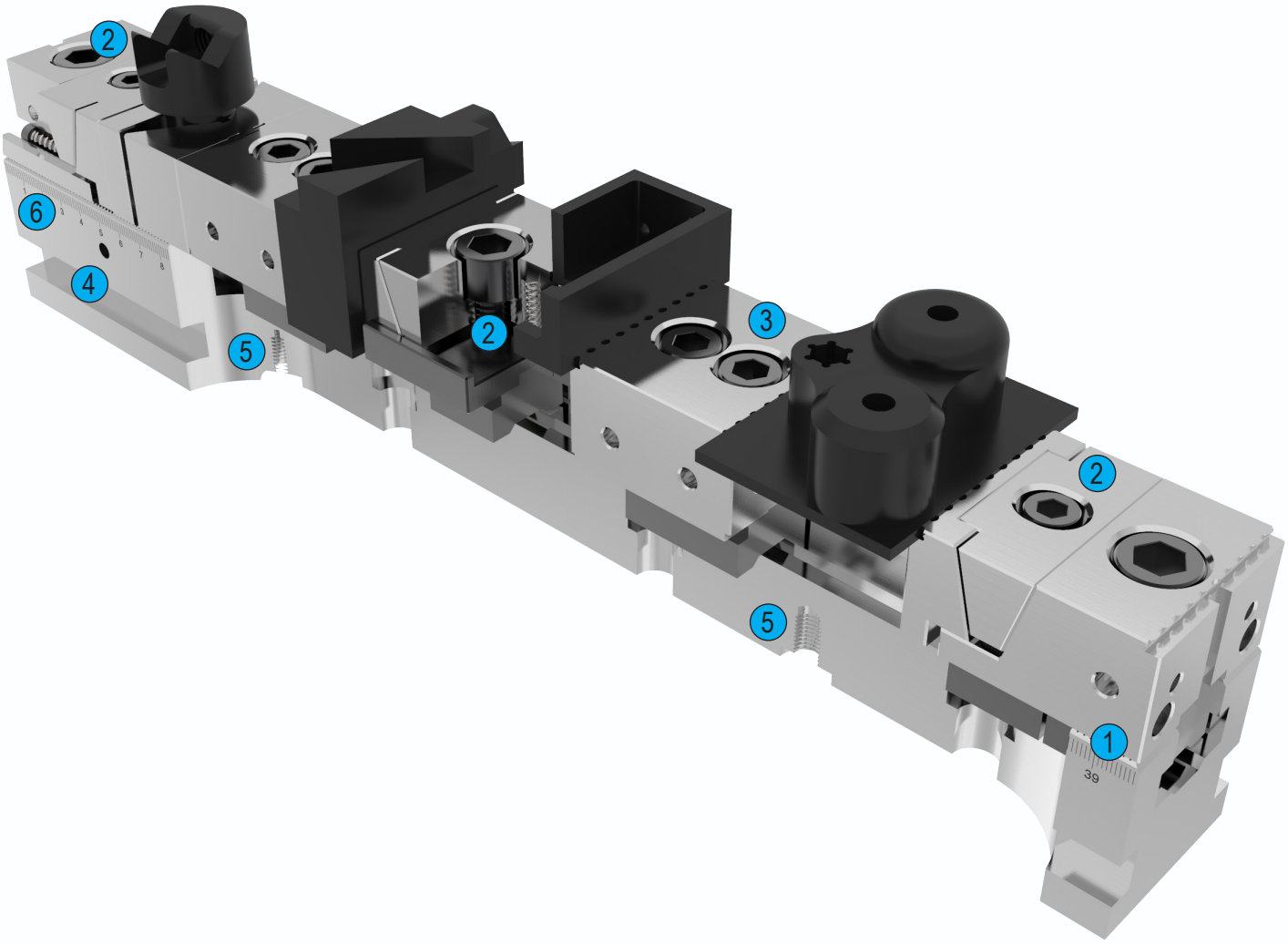

技术原理

1 硬化的齿
保证精度和位置稳定性

2 夹紧组件
针对新的夹紧任务可进行最佳调整

3 固定钳口
具备高度的灵活性，可旋转 180°

4 高强度的夹紧轨
确保最佳的生产效果

5 接口 SIMPLE-KSZ
可适用于所有 SIMPLE-KSZ 夹紧站

6 激光蚀刻尺
快速定位夹紧钳口

Technology

1 Hardened and ground serration
For maximum precision and form stability

2 Clamping assembly
Optimal adjustment for new clamping tasks

3 Fixed jaw can be turned 180°
High degree of flexibility

4 High-strength clamping rails
Ensure the best production results

5 SIMPLE-KSZ interface
Can be adapted to all SIMPLE-KSZ clamping stations

6 Laser-etched ruler
For quick chuck jaw positioning

型号介绍
Model introduction

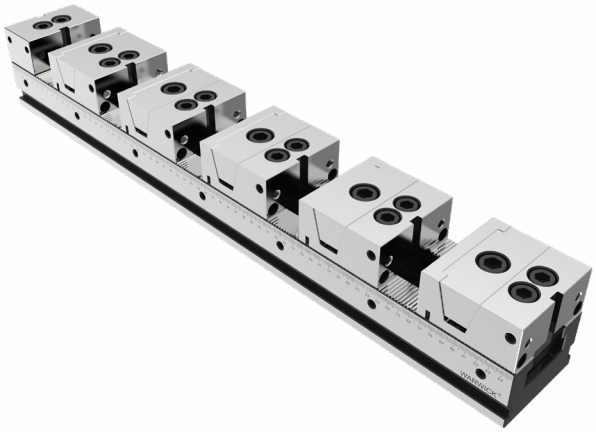

KSD:
多功能虎钳
Multi Clamping Vise

50: 50MM

88: 88MM

型号 | Model

宽度 | Width

KSD 88 – 650 – 5 FD

长度 | Length

夹持工件数
Number of workpieces clamped

工位型号
Clamping model

150: 150MM

300: 300MM

400: 400MM

500: 500MM

600: 600MM

650: 650MM

700: 700MM

1 : 1 PCS

2 : 2 PCS

3 : 3PCS

4 : 4 PCS

5 : 5 PCS

6 : 6 PCS

7 : 7 PCS

FD:
单向夹持
One-way Clamping

FDT:
锯齿型单向夹持
Jagged type One-way Clamping

MD:
双向夹持
Two-way clamping

MDT:
强力双向夹持
Jagged type Two-way clamping

使用案例

1. **FD-T** 齿型单一方向夹紧钳口
2. **GD-T** 齿型固定钳口
3. **MD-T** 齿型双向夹紧钳口
4. **MD** 双向夹紧钳口
5. **GD** 固定钳口
6. **RZ-V** V 型软爪
7. **RZ-B** B 型软爪
8. **FD** 单一方向夹紧钳口
9. **KSZ** 零点定位

Use Cases

1. **FD-T** Tooth type unidirectional clamping
2. **GD-T** Tooth type fixed claw
3. **MD-T** Tooth type two-way clamping
4. **MD** Two-way clamping
5. **GD** Fixed claw
6. **RZ-V** V-shaped soft claw
7. **RZ-B** B-type soft jaw
8. **FD** One-way clamping
9. **KSZ** Zero Point Positioning System

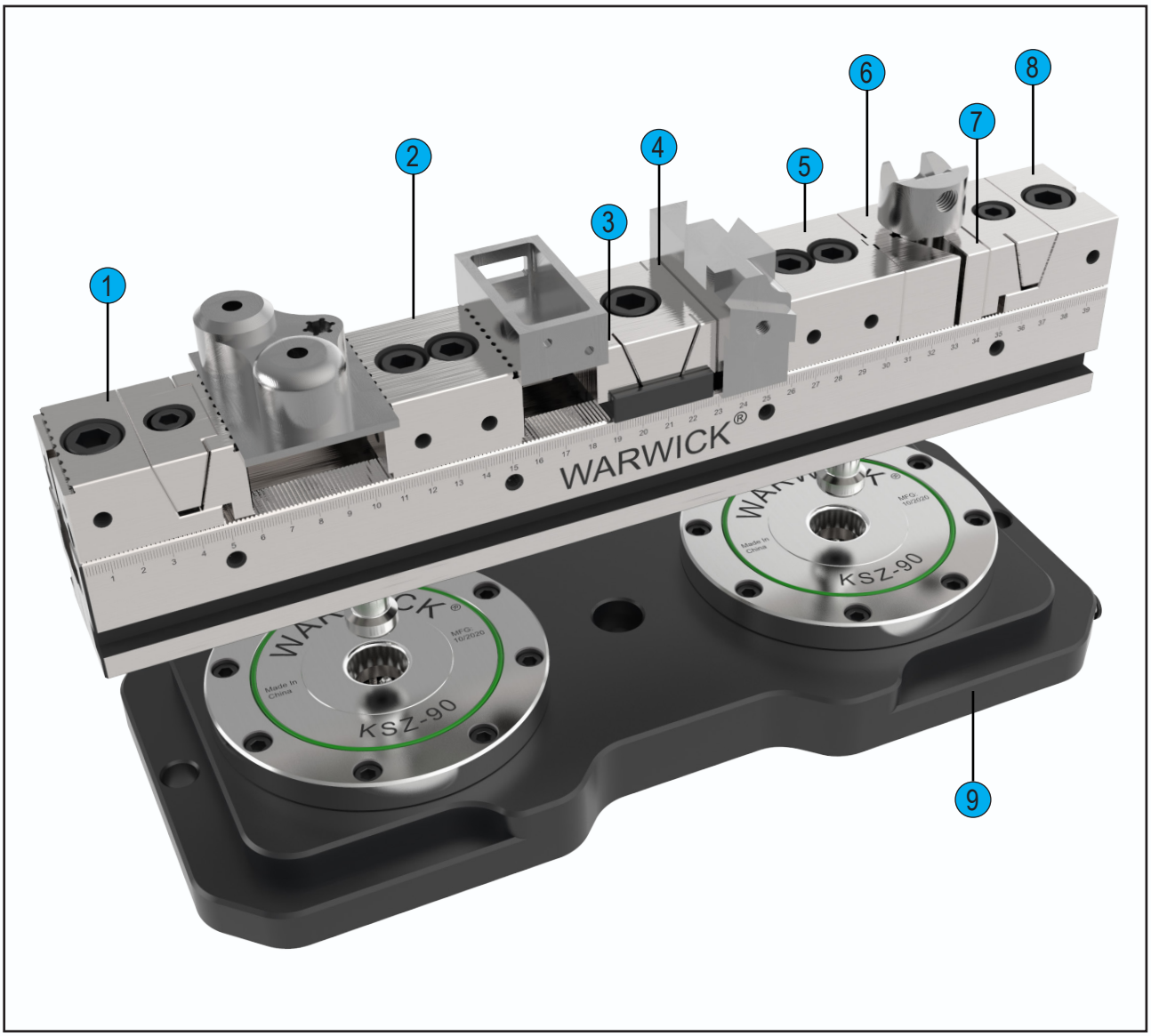

功能展示

Technology

标准型：

standard type

平面夹紧工件
可安装不同型号软爪

Plane clamping workpiece

Different types of soft jaws can be installed

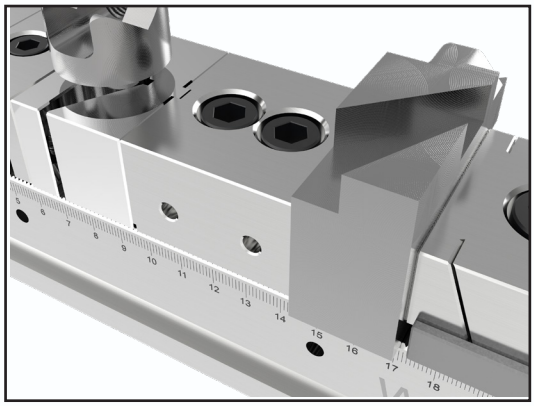

T 强力型：

T powerful type:

增加摩擦系数的锯齿
带有锯齿的 2.5mm 台阶
可安装不同型号软爪

Sawtooth to increase the coefficient of friction

2.5mm stepped band sawtooth

Different types of soft jaws can be installed

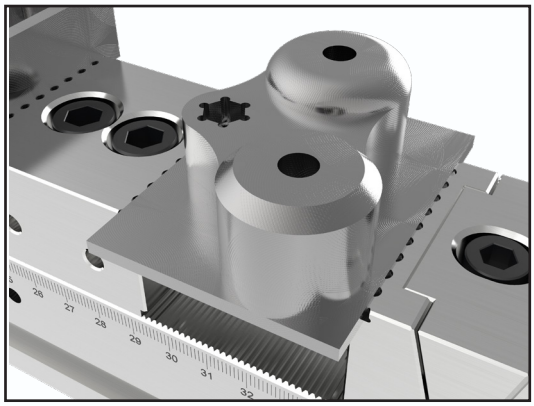

FD 标准型：

FD standard type

单方向夹紧
钳口安装定位槽
内置反冲弹簧
紧凑的尺寸让工位更多

One-way clamping

Claw-shaped installation positioning groove

Built-in return spring

Compact size allows more workstations

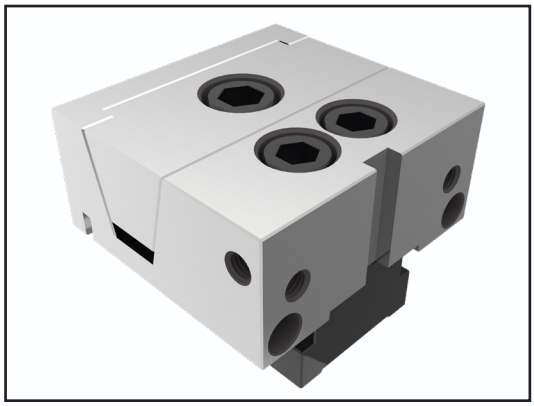

FD-T 强力型：

FD-T powerful type:

锯齿咬合夹紧面
单方向夹紧
钳口安装定位槽
内置反冲弹簧
紧凑的尺寸让工位更多

Serrated clamping surface

One-way clamping

Claw-shaped installation positioning groove

Built-in return spring

Compact size allows more workstations

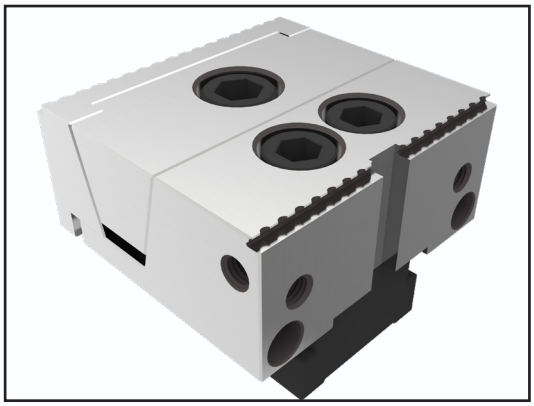

功能展示

Technology

MD 标准型：

双方向夹紧
钳口安装定位槽
内置反冲弹簧
紧凑的尺寸让工位更多

MD standard type

Two-way clamping
Claw-shaped installation positioning groove
Built-in return spring
Compact size allows more workstations

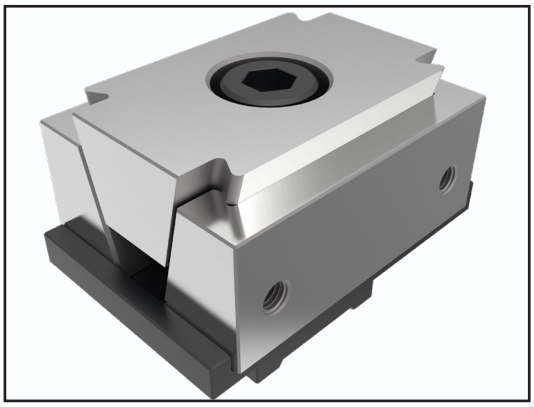

MD-T 强力型：

锯齿咬合夹紧面
双方向夹紧
钳口安装定位槽
内置反冲弹簧
紧凑的尺寸让工位更多

MD-T powerful type:

Serrated clamping surface
Two-way clamping
Claw-shaped installation positioning groove
Built-in return spring
Compact size allows more workstations

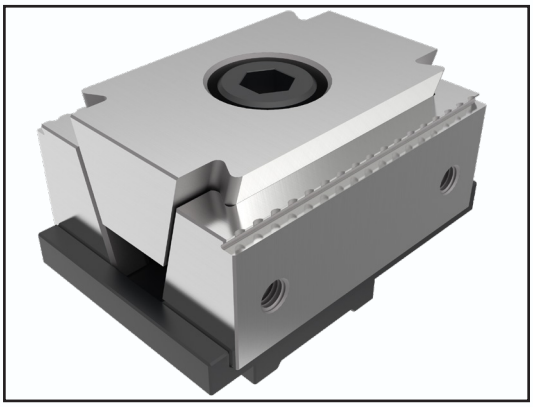

GD 标准型：

FD 和 MD 系列夹紧钳口通用
钳口安装定位槽
紧凑的尺寸带来更多的工位

GD standard type：

Common for FD and MD series grippers
Claw installation positioning groove
Compact size brings more workstations

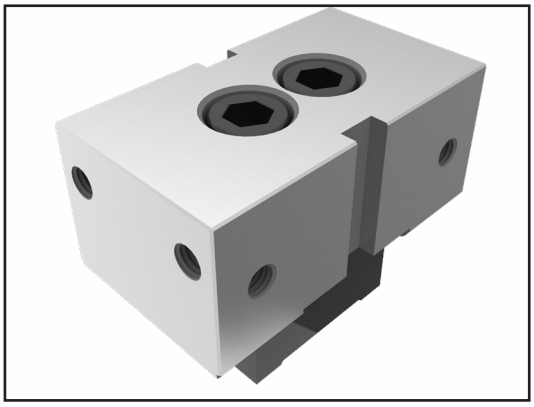

GD-T 强力型：

FD 和 MD 系列夹紧钳口通用
锯齿咬合夹紧面
钳口安装定位槽
紧凑的尺寸带来更多的工位

GD-T powerful type:

Common for FD and MD series grippers
Serrated clamping surface
Claw installation positioning groove
Compact size brings more workstations

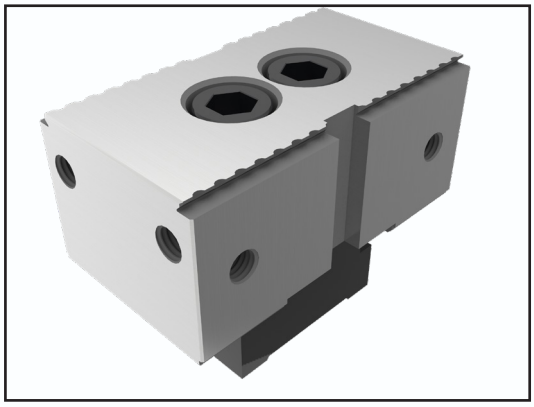

夹紧范围

Clamping Capacity

最大夹紧范围
可装夹工件最大尺寸-取决于导轨长度和夹紧区域数量。

The clamping range shows the max.
The maximum size of the workpiece that can be clamped-depends on the length of the guide rail and the number of clamping areas.

型号 Description		装夹工件数量 Number of workpieces clamped								
		1	2	3	4	5	6	7	8	9
KSD50-300	最大装夹尺寸 Maximum workpiece clamping size	192	67	25	4					
KSD50-400		292	117	58	29	12				
KSD50-500		392	167	92	54	32	17	6		
KSD50-600		492	217	125	79	52	33	20	10	3
KSD50-650		542	242	142	92	62	42	27	17	8

FD 型 可调式平面钳口

FD TYPE Adjustable jaws with Parallel plane

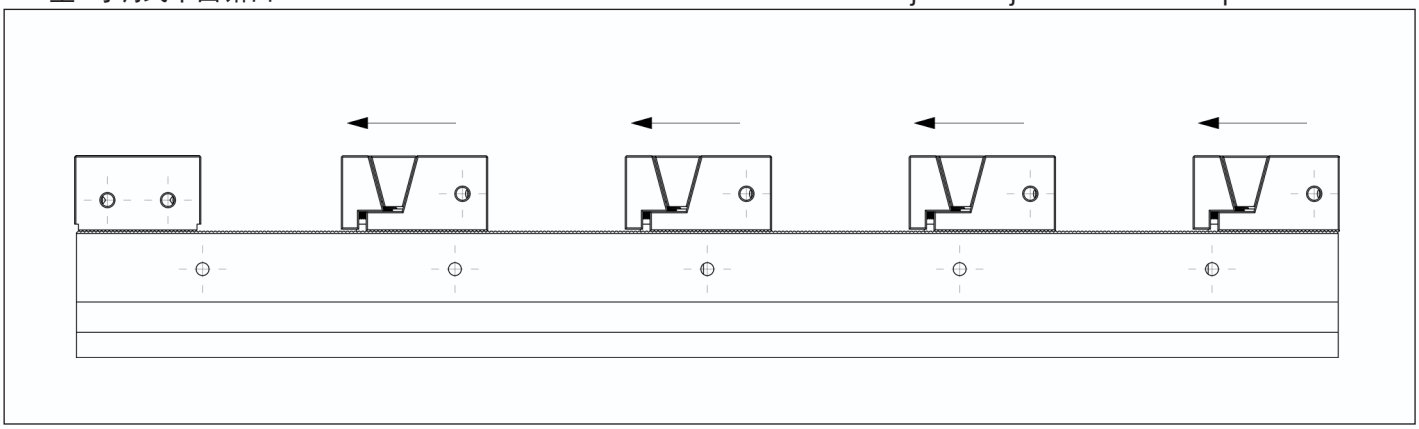

型号 Description		装夹工件数量 Number of workpieces clamped								
		1	2	3	4	5	6	7	8	9
KSD50-300	最大装夹尺寸 Maximum workpiece clamping size	197	72	30	9					
KSD50-400		297	122	63	34	17				
KSD50-500		397	172	97	59	37	22	11		
KSD50-600		497	222	130	84	57	38	25	15	8
KSD50-650		547	247	147	97	67	47	32	22	13

FD-T 型 可调式齿形台阶钳口

FD-T TYPE Adjustable jaws with Toothed steps

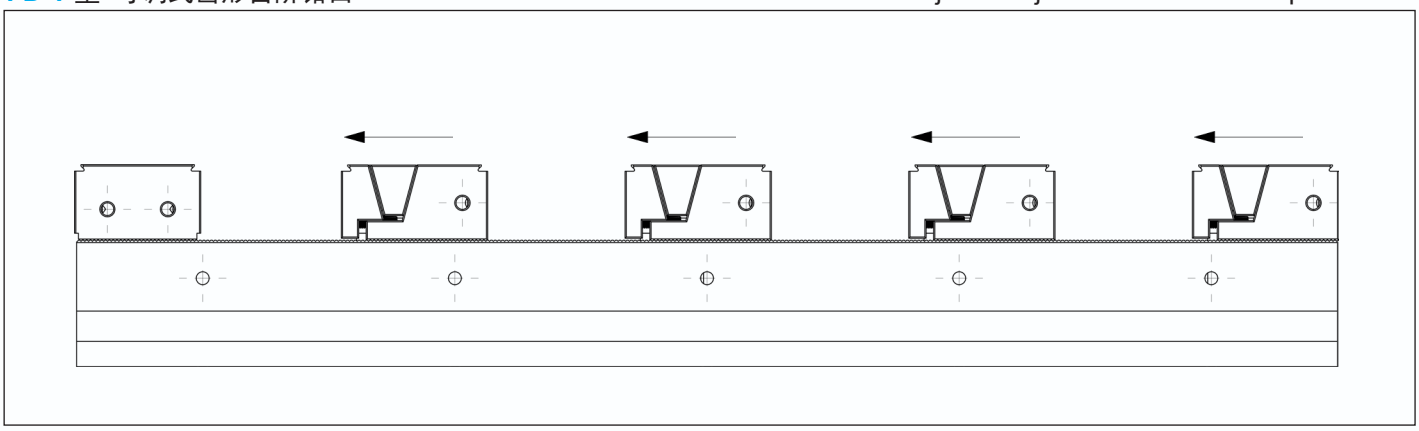

夹紧范围

Clamping Capacity

最大夹紧范围
可装夹工件最大尺寸-取决于导轨长度和夹紧区域数量。

The clamping range shows the max.
The maximum size of the workpiece that can be clamped-depends on the length of the guide rail and the number of clamping areas.

型号 Description		夹持工件数量 Number of workpieces clamped							
		2	4	6	8	10	12	14	
KSD50-300	最大装夹尺寸 Maximum workpiece clamping size	78	20						
KSD50-400		128	45	18	4				
KSD50-500		178	70	35	16	6			
KSD50-600		228	95	50	29	16	7		
KSD50-650		253	108	58	35	21	11	4	

MD 型 楔形夹爪

MD TYPE With wedge clamping jaws

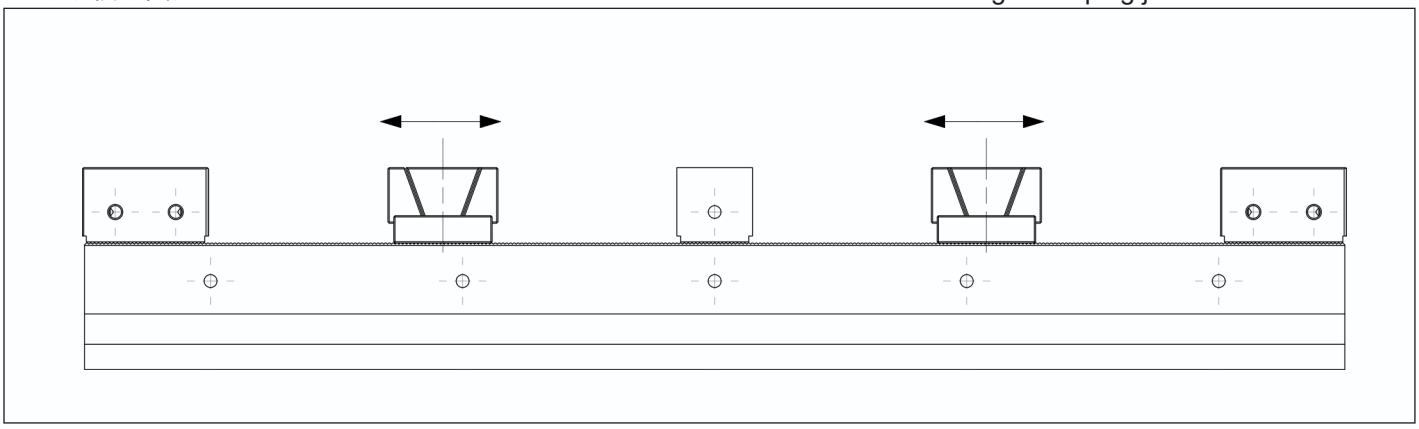

型号 Description		夹持工件数量 Number of workpieces clamped							
		2	4	6	8	10	12	14	
KSD50-300	最大装夹尺寸 Maximum workpiece clamping size	80	22						
KSD50-400		130	47	20	6				
KSD50-500		180	72	37	18	8			
KSD50-600		230	97	52	31	18	9		
KSD50-650		255	110	60	37	23	13	6	

MD-T 型 齿式阶梯楔形夹爪

MD-T TYPE With Stepped wedge clamping jaws

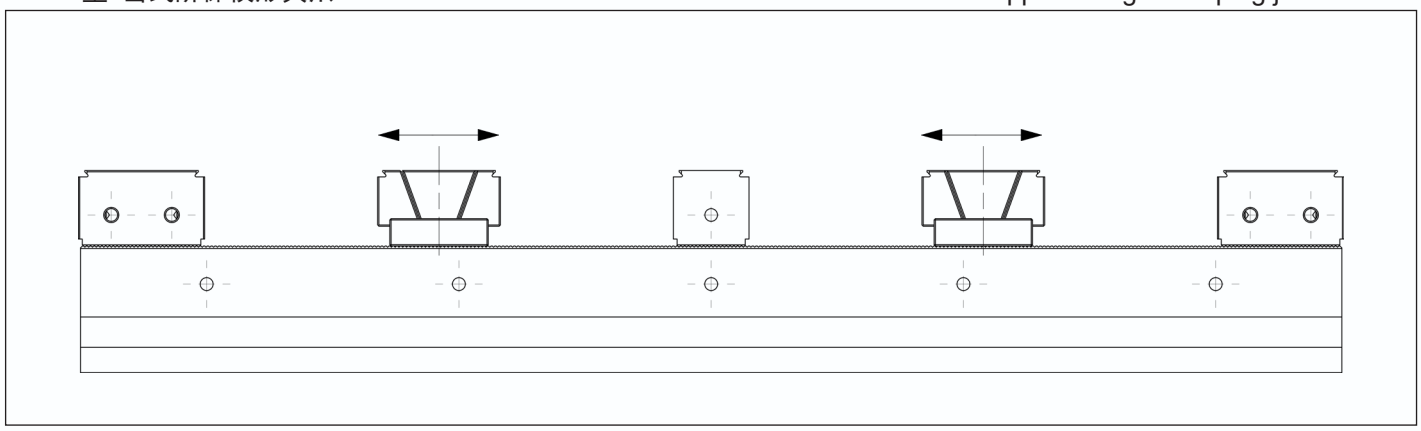

夹紧轨道
无系统钳口

Clamping Rail
Without system jaws

供货范围
夹紧轨道和操作手册； 不含夹紧钳口和固定钳口

Scope of delivery
Clamping rail inclusive operating manual; without system jaws

型号 Description	编号 ID	轨道宽度 Rail width [mm]	夹紧力 Clamping force [kN]	最高扭力 Max. torque [N.m]	重量 Weight [kg]
KSD50-300	21010	50	17.86	30(FD) 60(MD)	4

使用其他钳口时，夹紧范围可能会有所不同。

When using other jaws the clamping range can differ.

KSD-50-300-**FD TYPE**

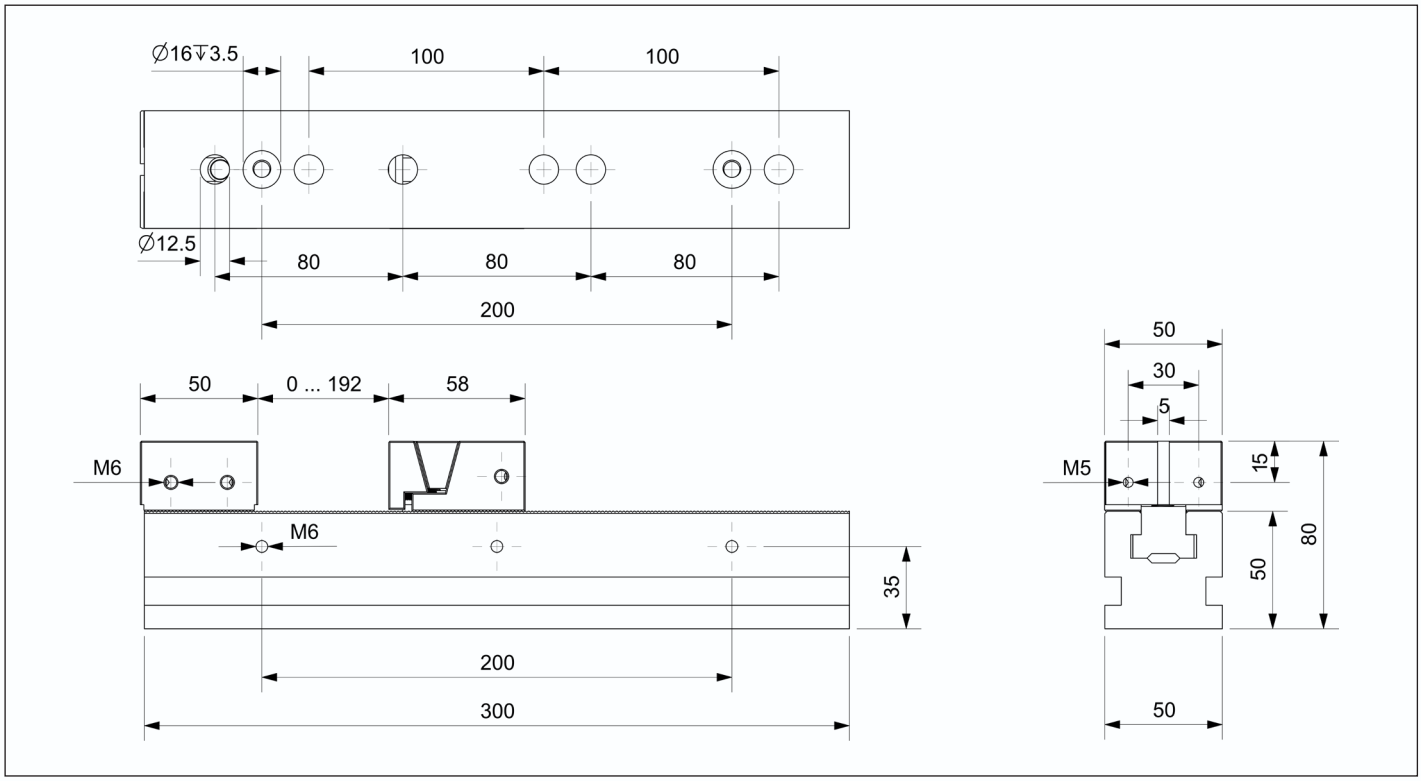

KSD-50-300-**MD TYPE**

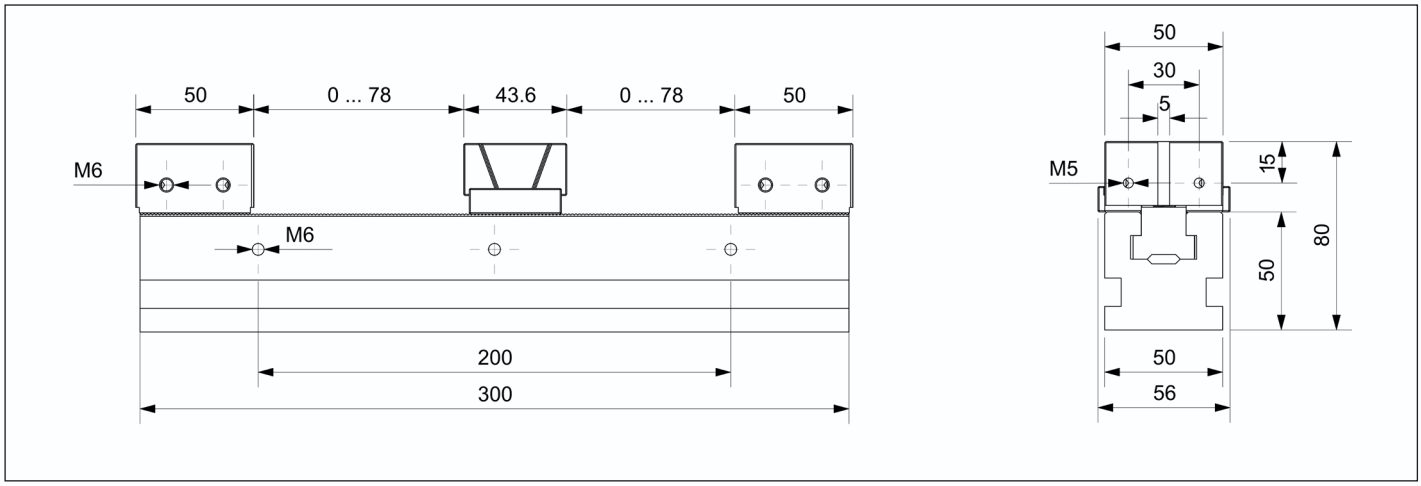

夹紧轨道
无系统钳口

Clamping Rail
Without system jaws

供货范围
夹紧轨道和操作手册； 不含夹紧钳口和固定钳口

Scope of delivery
Clamping rail inclusive operating manual; without system jaws

型号 Description	编号 ID	轨道宽度 Rail width [mm]	夹紧力 Clamping force [kN]	最高扭力 Max. torque [N.m]	重量 Weight [kg]
KSD50-400	21020	50	17.86	30(FD) 60(MD)	5.4

使用其他钳口时，夹紧范围可能会有所不同。

When using other jaws the clamping range can differ.

KSD-50-400-**FD TYPE**

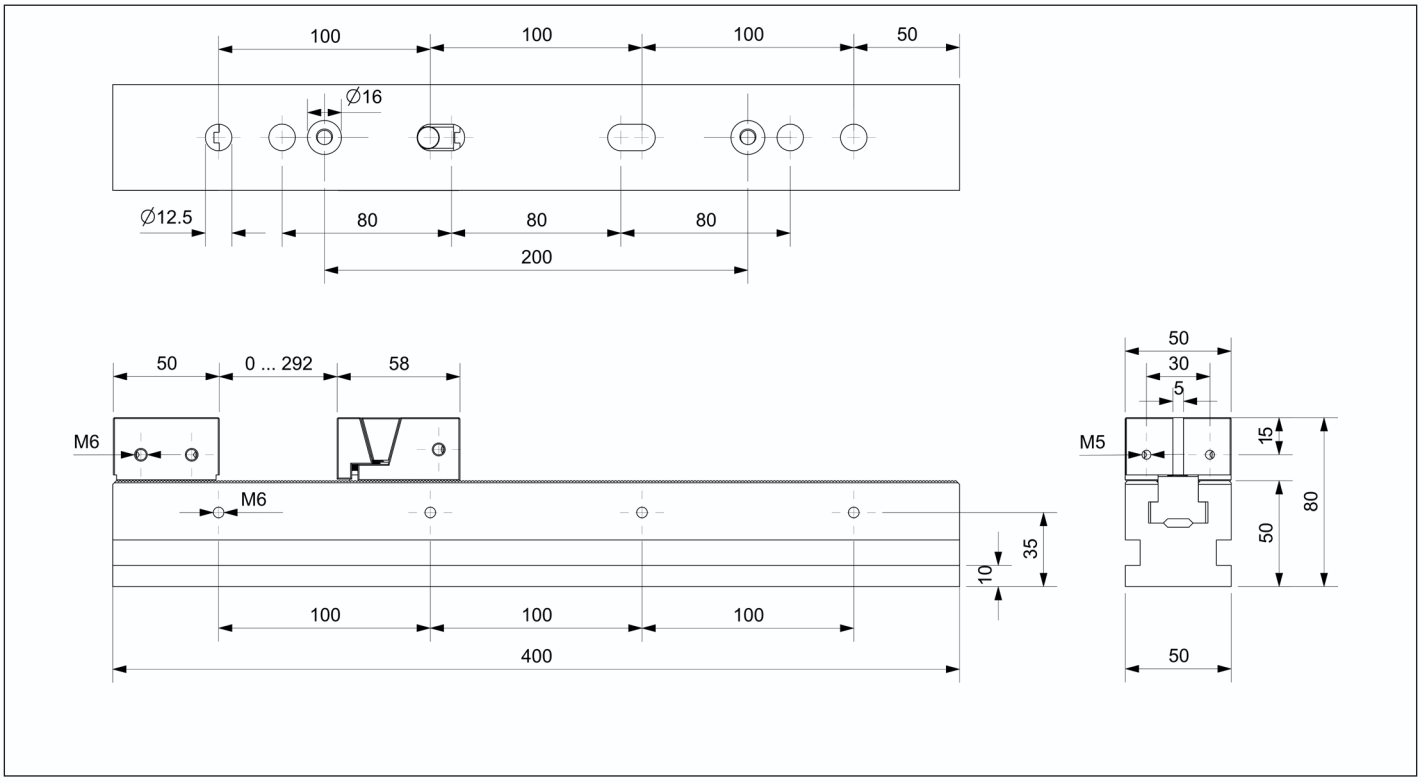

KSD-50-400-**MD TYPE**

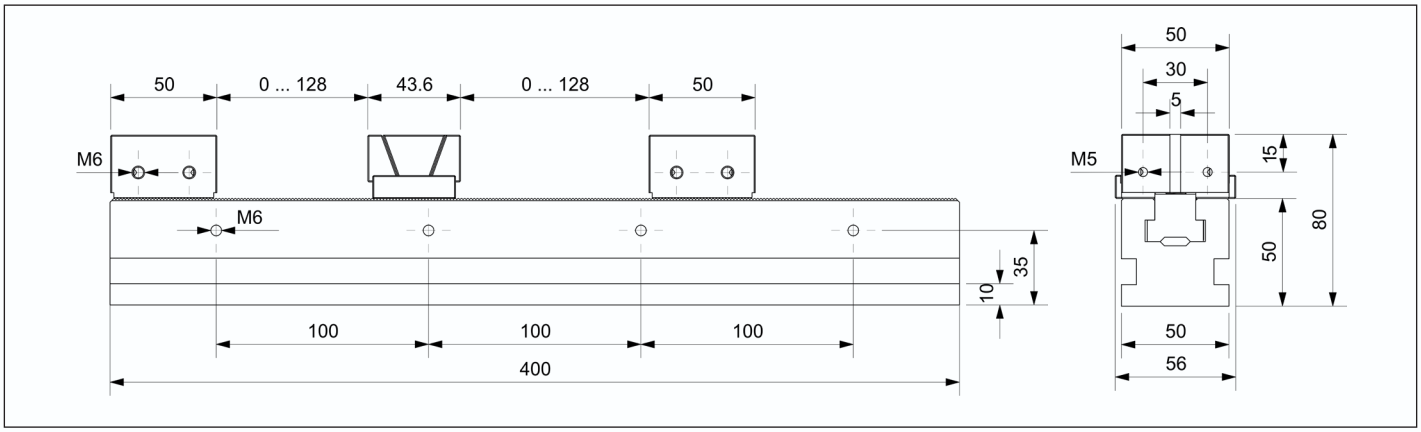

Affordable - KSD - 50

多功能虎钳 | Multi Clamping Vise

夹紧轨道
无系统钳口

Clamping Rail
Without system jaws

供货范围
夹紧轨道和操作手册； 不含夹紧钳口和固定钳口

Scope of delivery
Clamping rail inclusive operating manual; without system jaws

型号 Description	编号 ID	轨道宽度 Rail width [mm]	夹紧力 Clamping force [kN]	最高扭力 Max. torque [N.m]	重量 Weight [kg]
KSD50-500	21030	50	17.86	30(FD) 60(MD)	6.7

使用其他钳口时，夹紧范围可能会有所不同。

When using other jaws the clamping range can differ.

KSD-50-500-**FD TYPE**

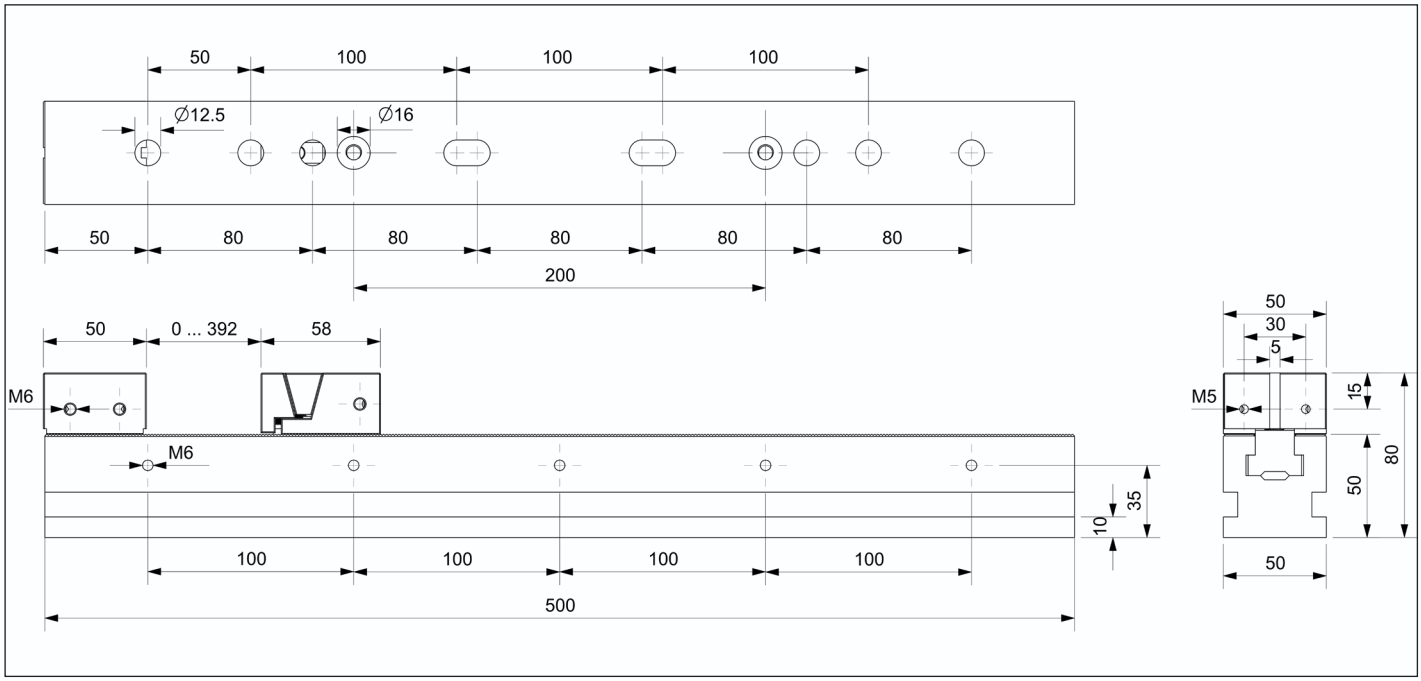

KSD-50-500-**MD TYPE**

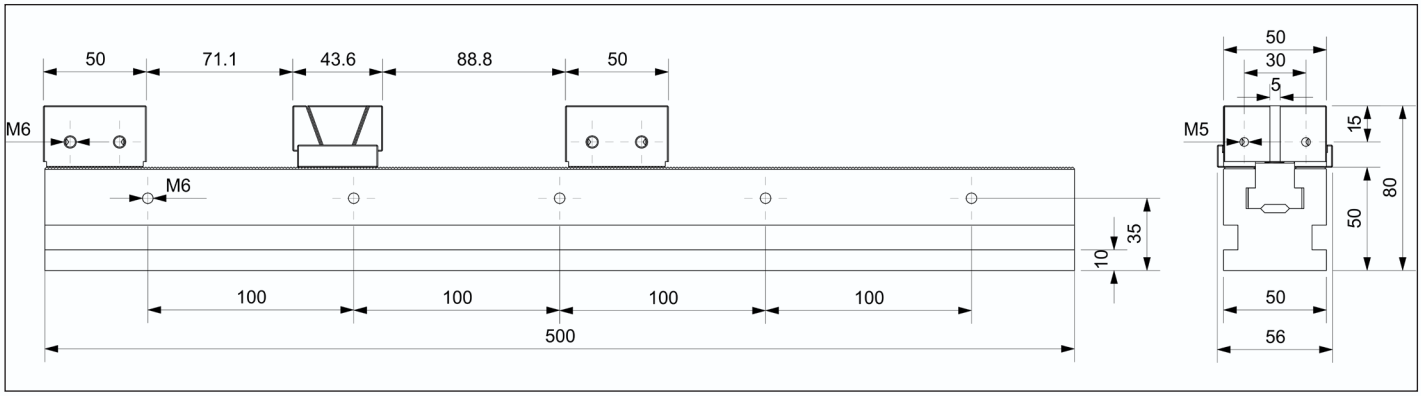

夹紧轨道
无系统钳口

Clamping Rail
Without system jaws

供货范围
夹紧轨道和操作手册； 不含夹紧钳口和固定钳口

Scope of delivery
Clamping rail inclusive operating manual; without system jaws

型号 Description	编号 ID	轨道宽度 Rail width [mm]	夹紧力 Clamping force [kN]	最高扭力 Max. torque [N.m]	重量 Weight [kg]
KSD50-600	21040	50	17.86	30(FD) 60(MD)	8

使用其他钳口时，夹紧范围可能会有所不同。

When using other jaws the clamping range can differ.

KSD-50-600-**FD TYPE**

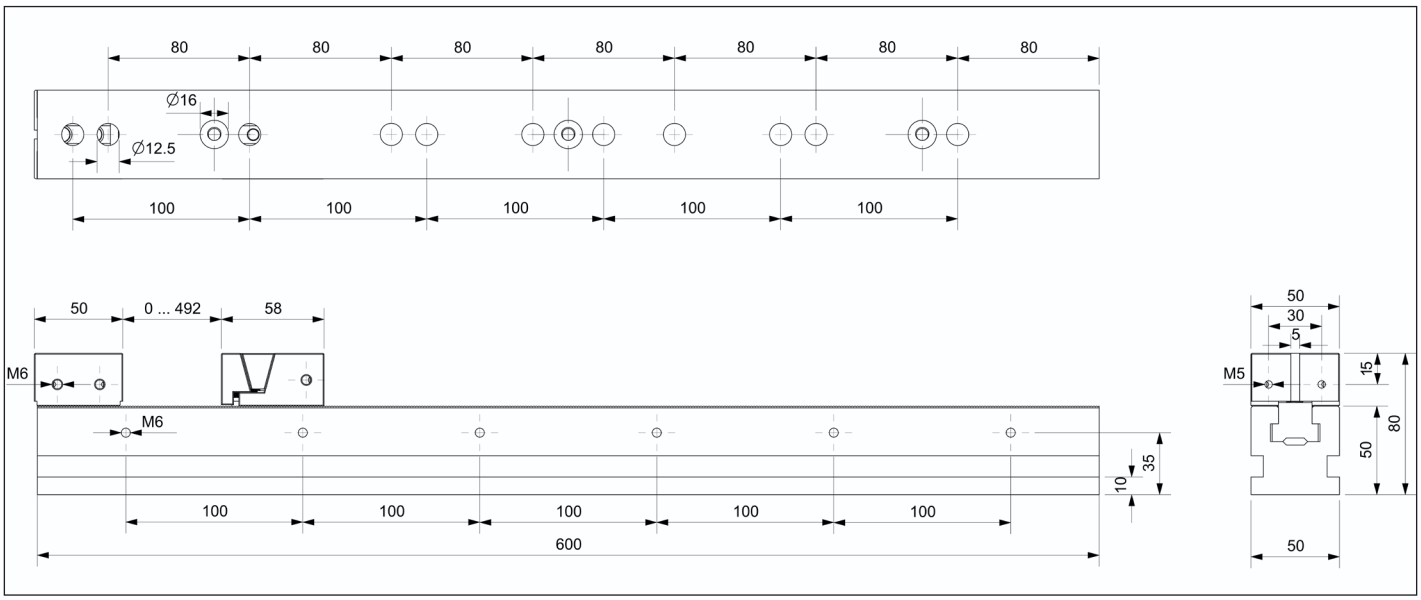

KSD-50-600-**MD TYPE**

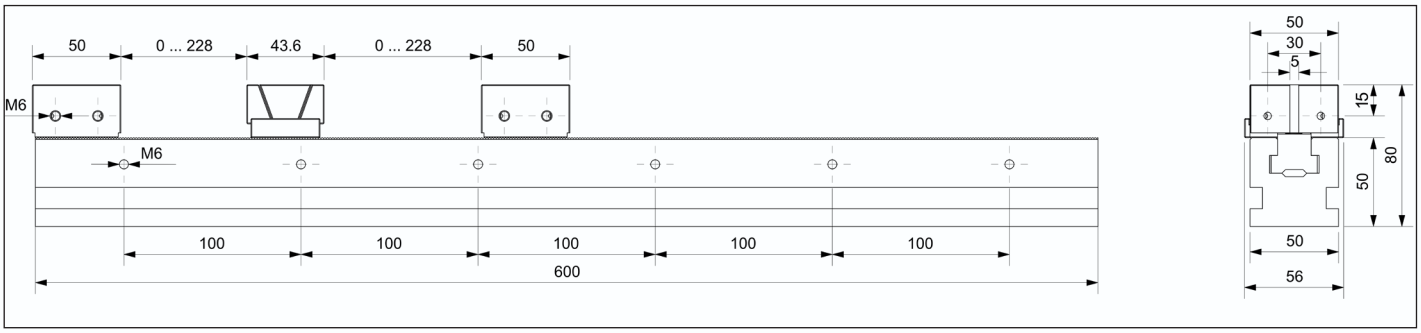

夹紧轨道
无系统钳口

Clamping Rail
Without system jaws

供货范围
夹紧轨道和操作手册； 不含夹紧钳口和固定钳口

Scope of delivery
Clamping rail inclusive operating manual; without system jaws

型号 Description	编号 ID	轨道宽度 Rail width [mm]	夹紧力 Clamping force [kN]	最高扭力 Max. torque [N.m]	重量 Weight [kg]
KSD50-700	21050	50	17.86	30(FD) 60(MD)	10.8

使用其他钳口时，夹紧范围可能会有所不同。

When using other jaws the clamping range can differ.

KSD-50-700-**FD TYPE**

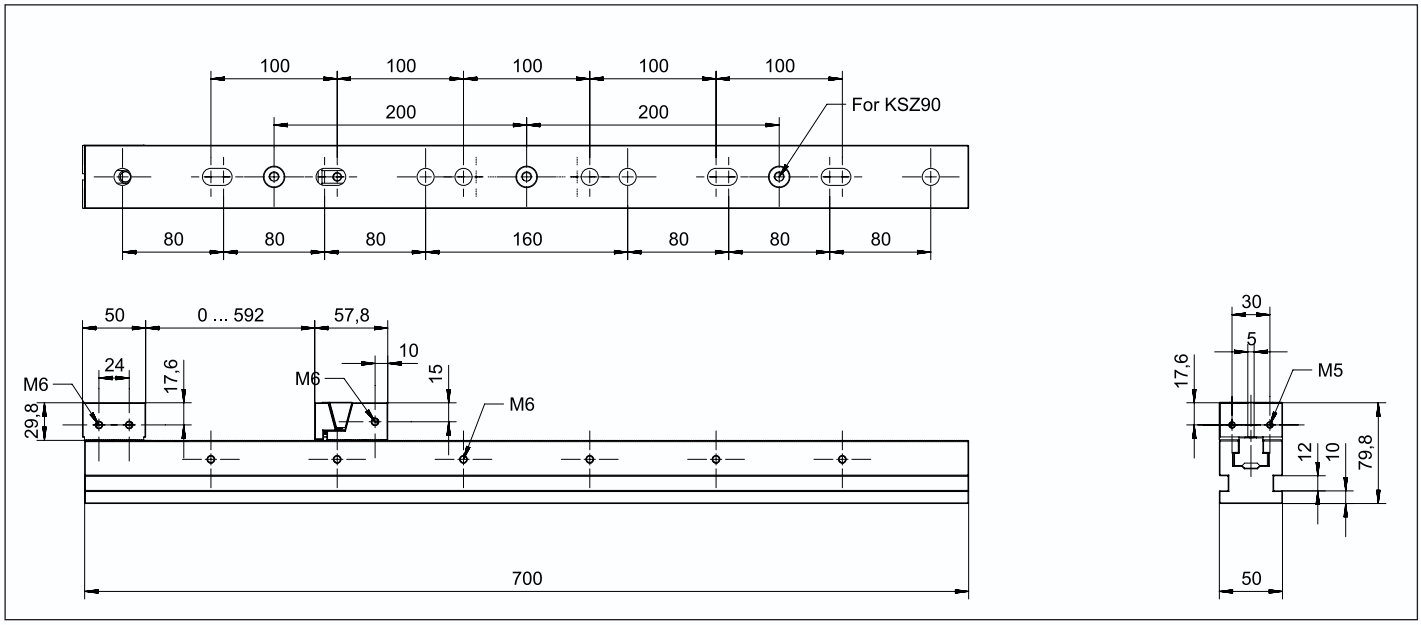

KSD-50-700-**MD TYPE**

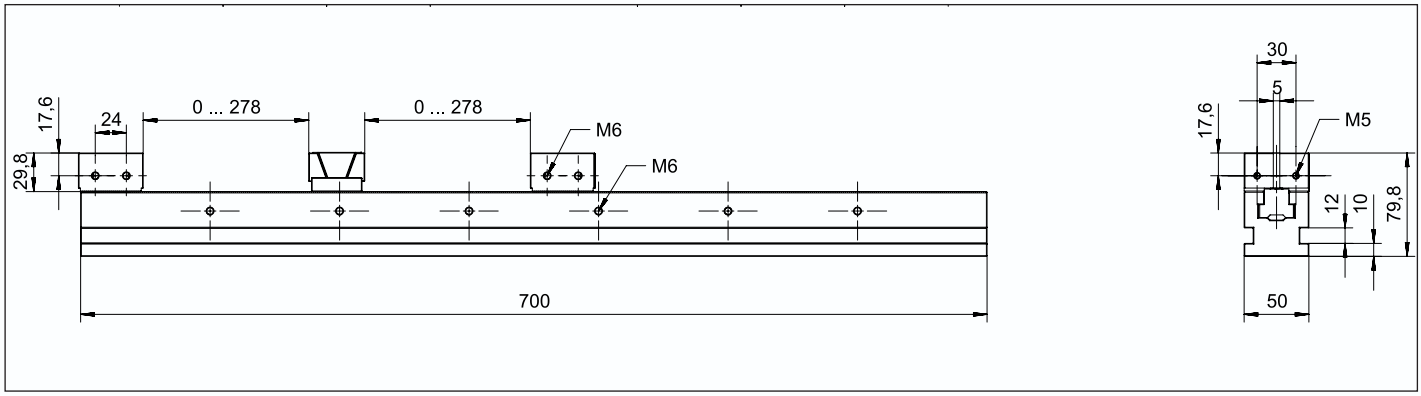

单向夹紧
不含夹紧轨道

One-way Clamping
Without Clamping Rail

供货范围
单项夹紧模块和操作手册； 不含夹紧轨道

Scope of delivery
One-way Clamping inclusive operating manual; without Clamping Rail

型号 Description	编号 ID	钳口宽度 Jaw width [mm]	夹紧力 Clamping force [kN]	最高扭力 Max. torque [N.m]	重量 Weight [kg]
50FD	21100	50	17.86	30	0.8
50FD-T	21101	50	17.86	30	0.8

50FD 型单向夹紧钳口 |50FD type unidirectional clamping jaw

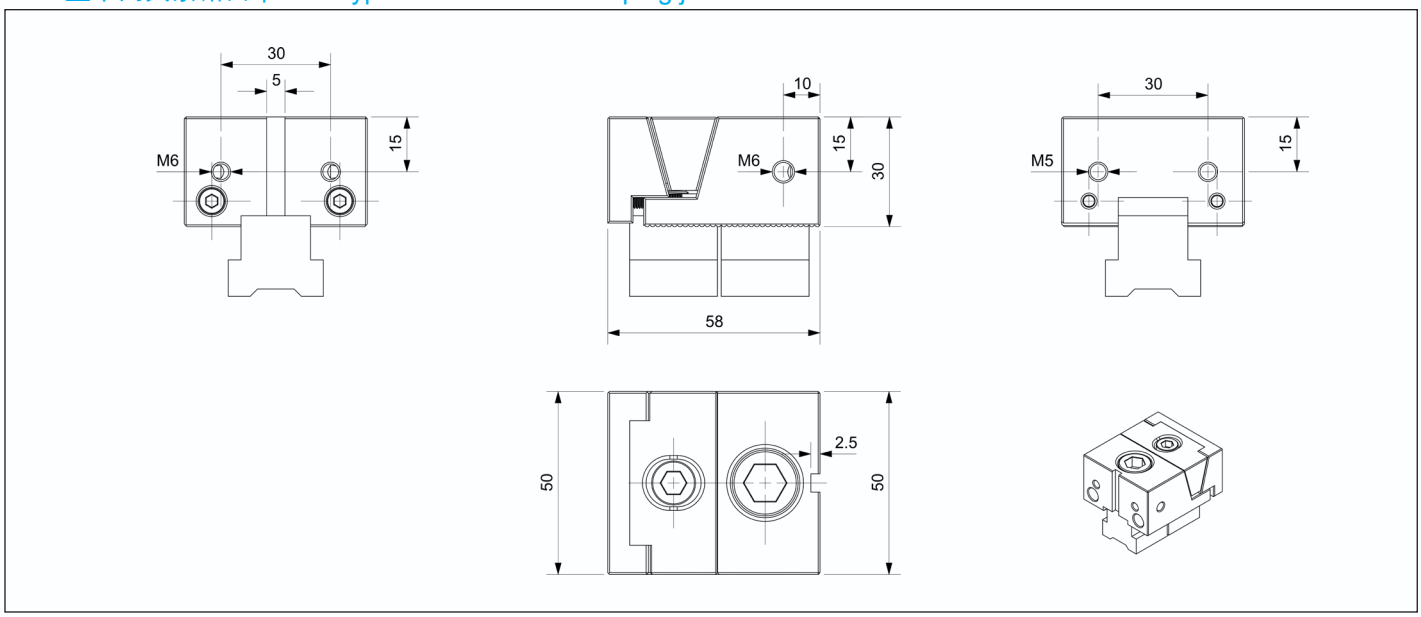

50FD-T 锯齿形型单向夹紧钳口 |50FD-T Jagged type unidirectional clamping jaw

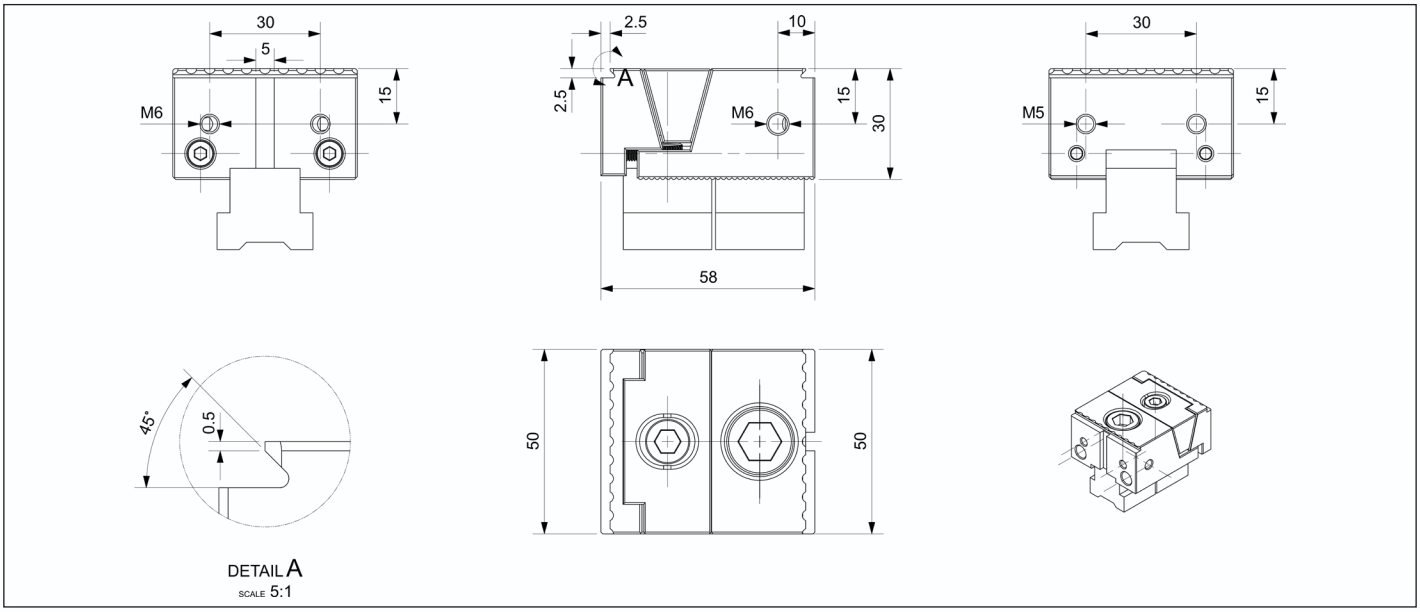

Affordable - KSD - 50

多功能虎钳 | Multi Clamping Vise

双向夹紧
不含夹紧轨道

Two-way Clamping
Without Clamping Rail

供货范围
双向项夹紧模块和操作手册； 不含夹紧轨道

Scope of delivery
Two-way Clamping inclusive operating manual; without Clamping Rail

型号 Description	编号 ID	钳口宽度 Jaw width [mm]	夹紧力 Clamping force [kN]	最高扭力 Max. torque [N.m]	重量 Weight [kg]
50MD	21110	50	17.86	60	0.6
50MD-T	21111	50	17.86	60	0.6

50MD 型双向夹紧钳口 |50MD type Bidirectional Clamping Jaw

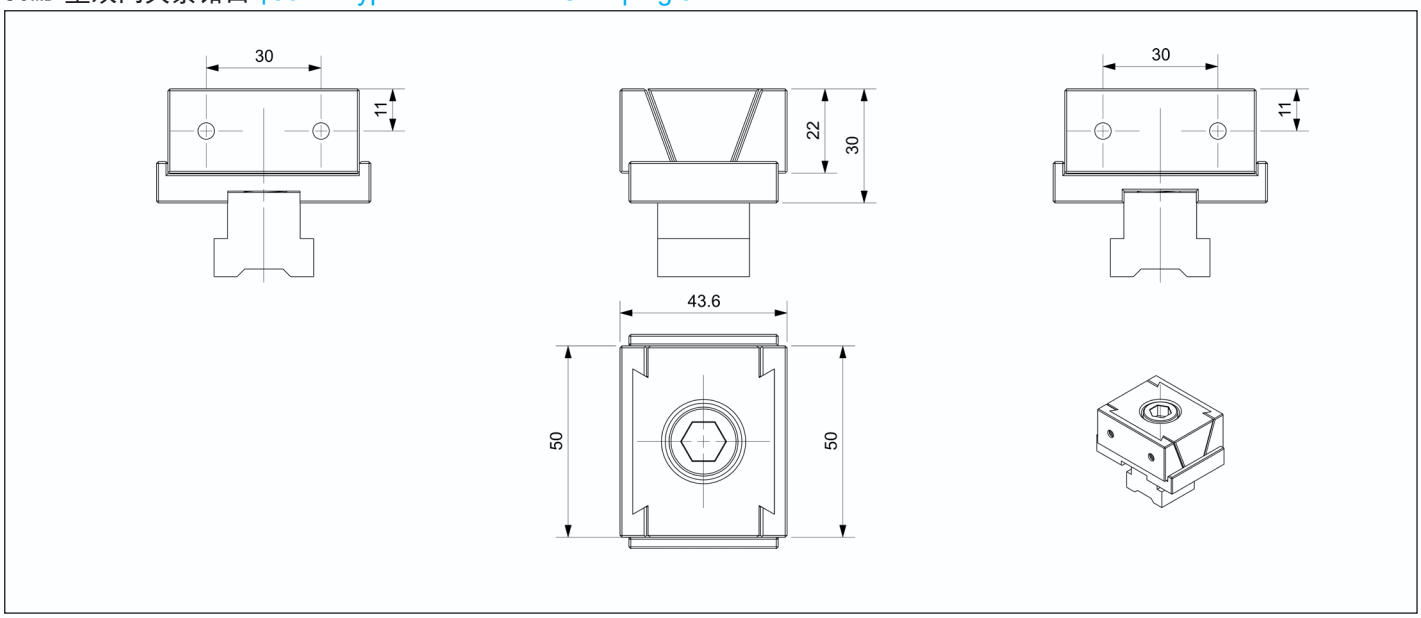

50MD-T 锯齿型双向夹紧钳口 |50MD-T Jagged type Bidirectional Clamping Jaw

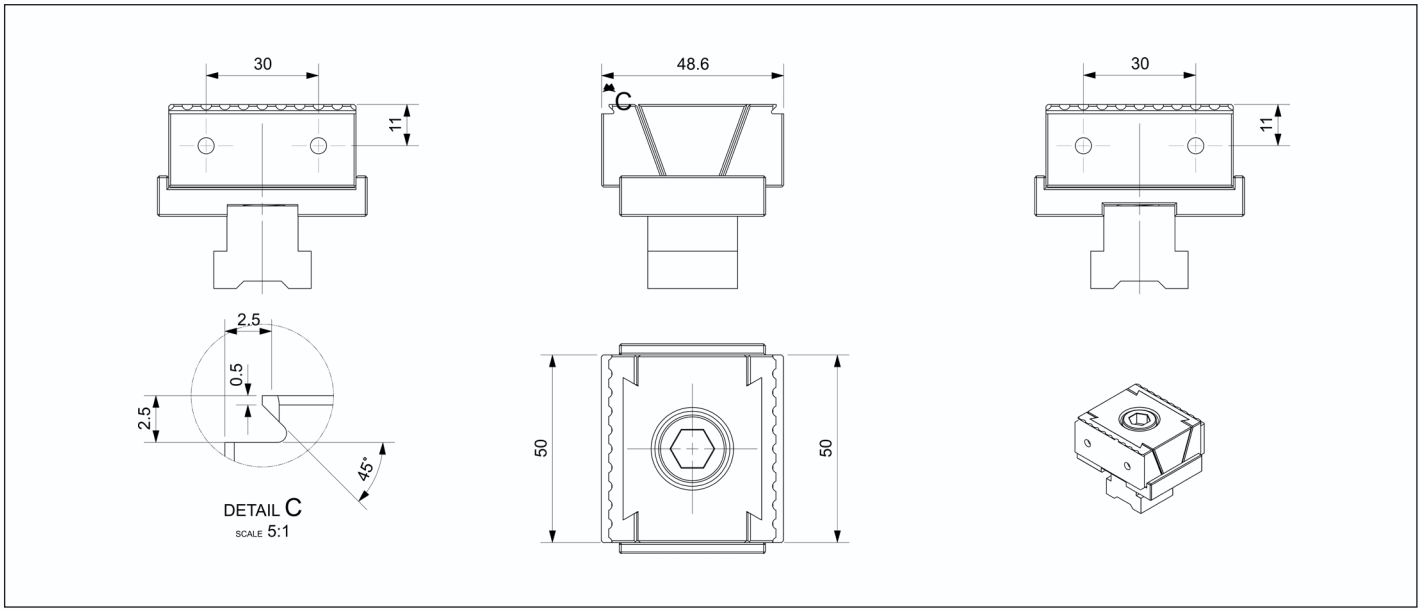

固定钳口
不含夹紧轨道

Fixed jaw
Without Clamping Rail

供货范围
固定钳口和操作手册； 不含夹紧轨道

Scope of delivery
Fixed jaw inclusive operating manual; without Clamping Rail

型号 Description	编号 ID	钳口宽度 Jaw width [mm]	夹紧力 Clamping force [kN]	最高扭力 Max. torque [N.m]	重量 Weight [kg]
50G	21201	50	-	80	0.65
50G-T	21202	50	-	80	0.65

50G 固定钳口 | 50G type Stationary clamping jaw

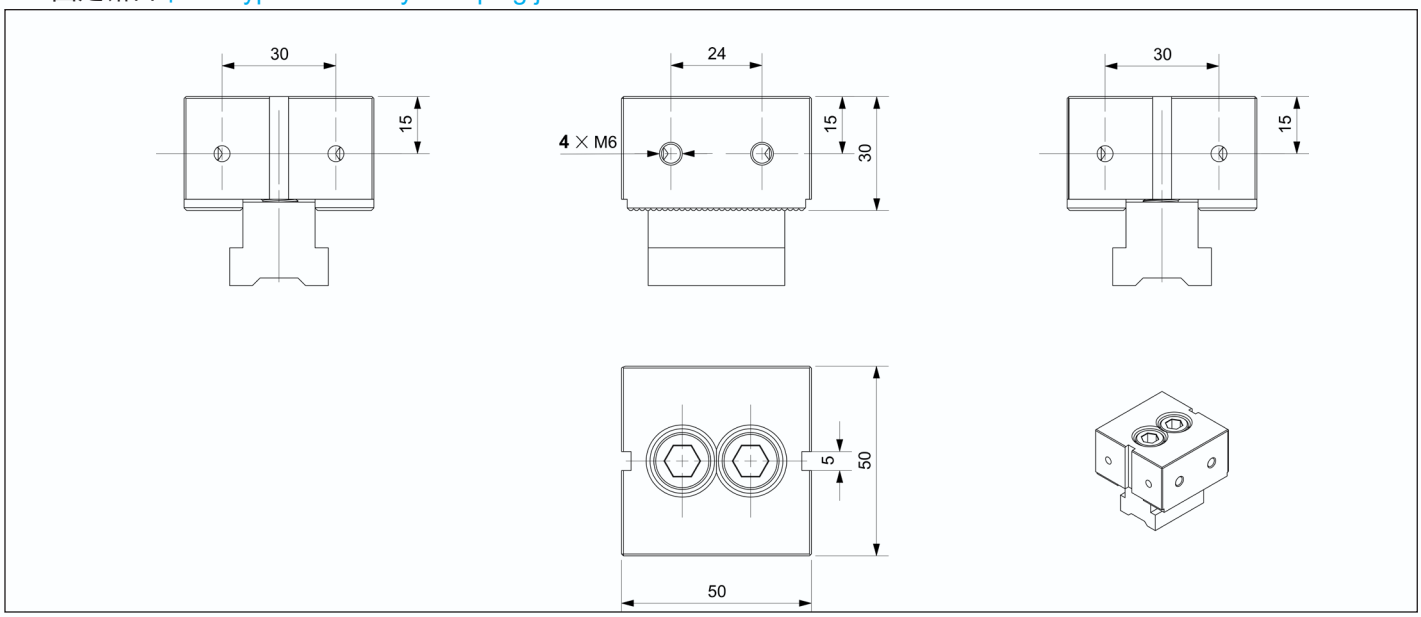

50G-T 锯齿型固定钳口 | 50G-T Serrated Stationary Clamping Jaw

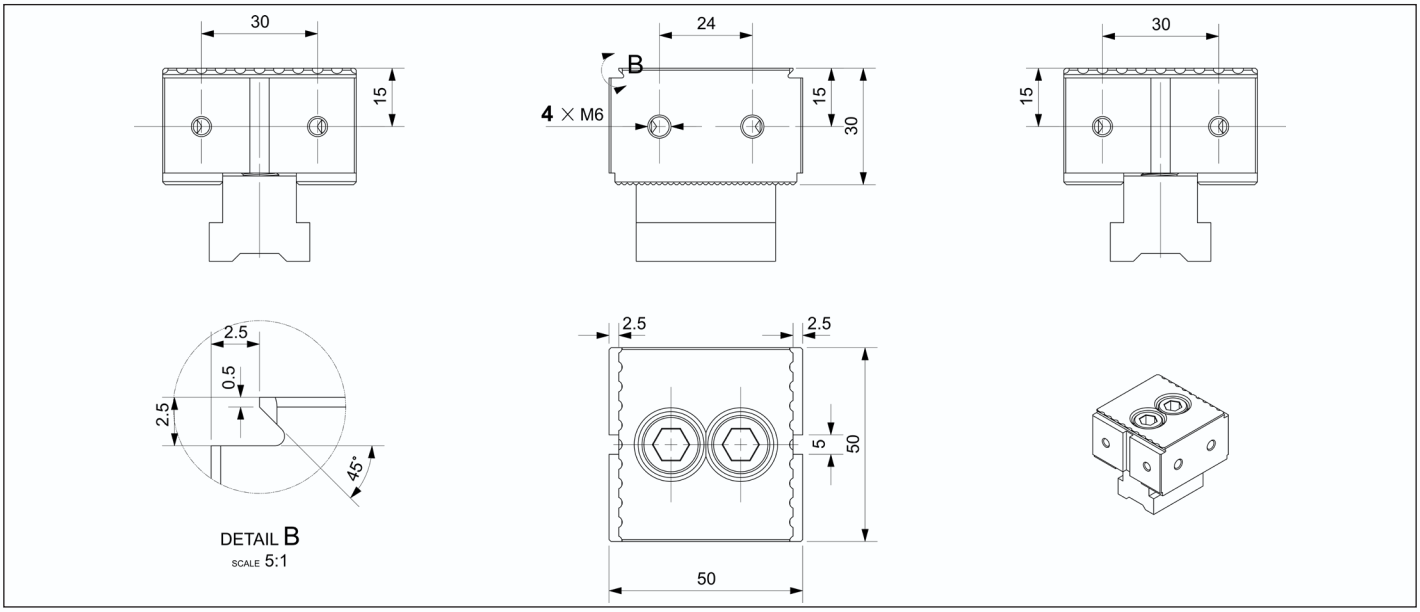

固定钳口
不含夹紧轨道

Fixed jaw
Without Clamping Rail

供货范围
固定钳口和操作手册； 不含夹紧轨道

Scope of delivery
Fixed jaw inclusive operating manual; without Clamping Rail

型号 Description	编号 ID	钳口宽度 Jaw width [mm]	夹紧力 Clamping force [kN]	最高扭力 Max. torque [N.m]	重量 Weight [kg]
50SG	21203	50	-	80	0.4
50SG-T	21204	50	-	80	0.4

50SG 固定钳口 | 50SG type fixed clamping jaw

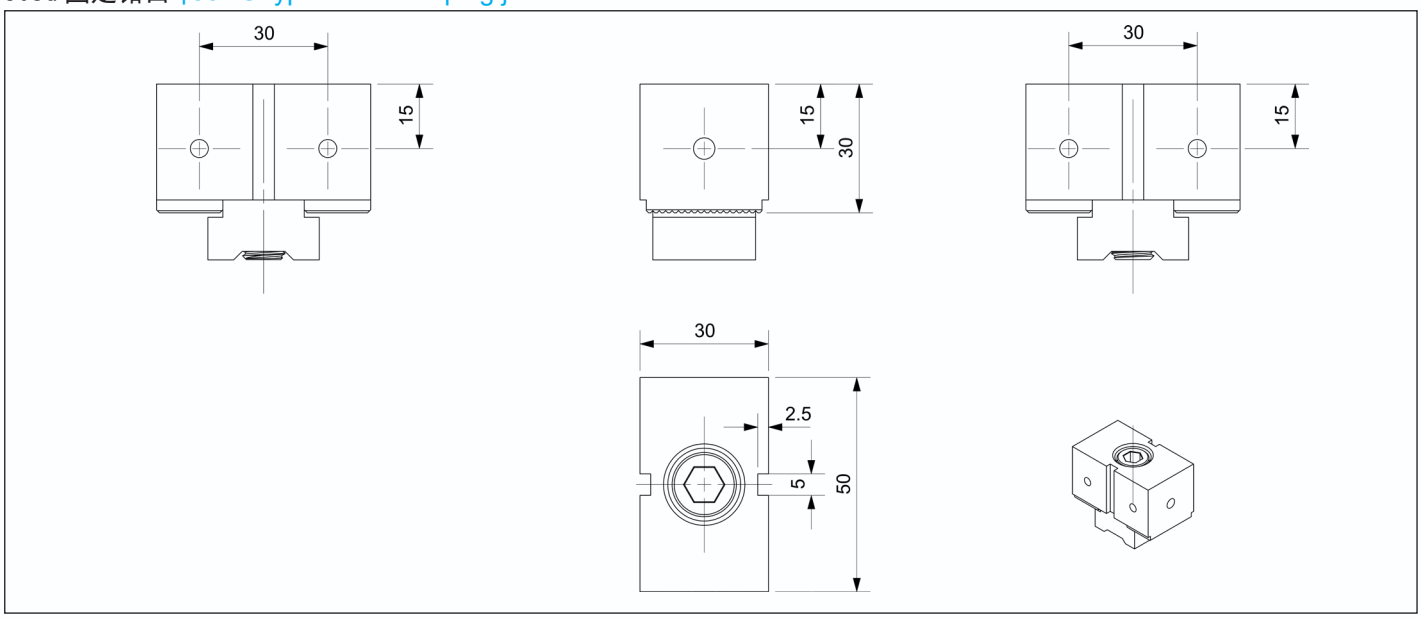

50SG-T 锯齿型固定钳口 | 50SG-T Serrated fixed jaw

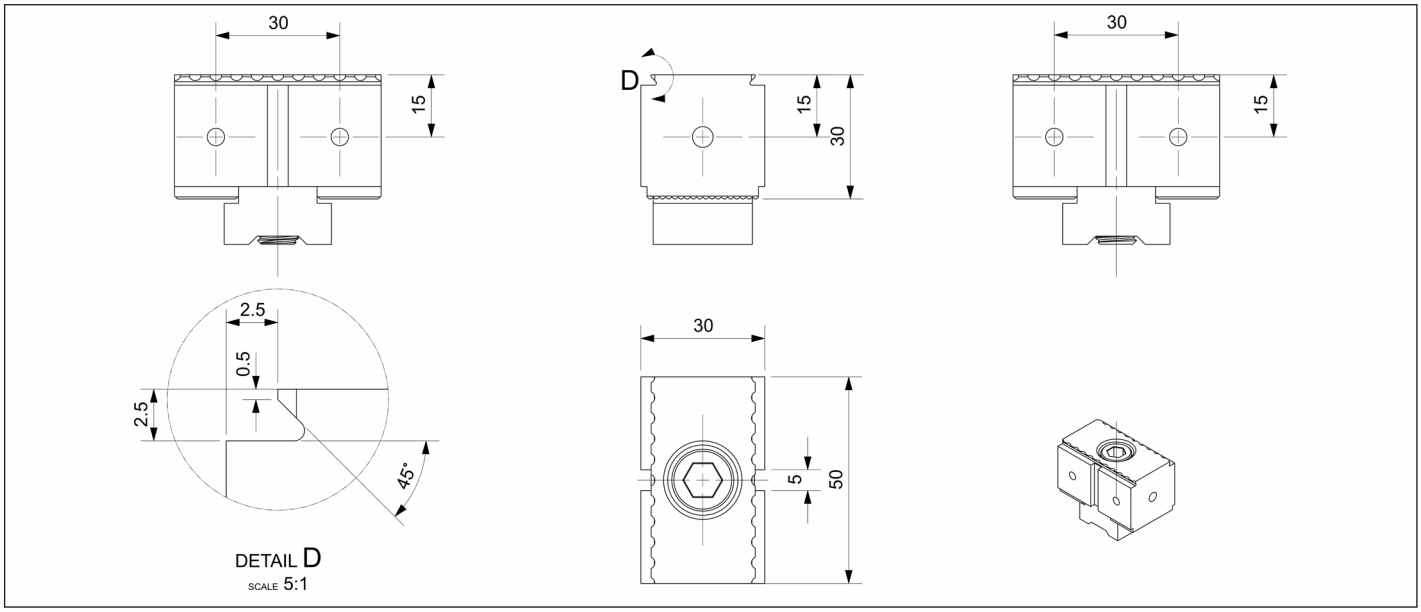

软爪
可定制生产

材料：S45C，可硬化 | 铝合金 6061
标准：螺钉固定孔 DIN EN ISO 4762
安装：通过槽

Soft claw
Customizable production

Material: S45C, hardenable | Aluminum 6061
Version: Fastening bores for screw DIN EN ISO 4762
Mounting: Via tongue and groove

型号 Description	编号 ID	钳口宽度 Jaw width [mm]	装夹范围 Clamping range [mm]	重量 Weight [kg]
50RZ-V	21211	50	MAX Φ70	0.2

50RZ-V 型软爪 | 50RZ-V type clamping jaw

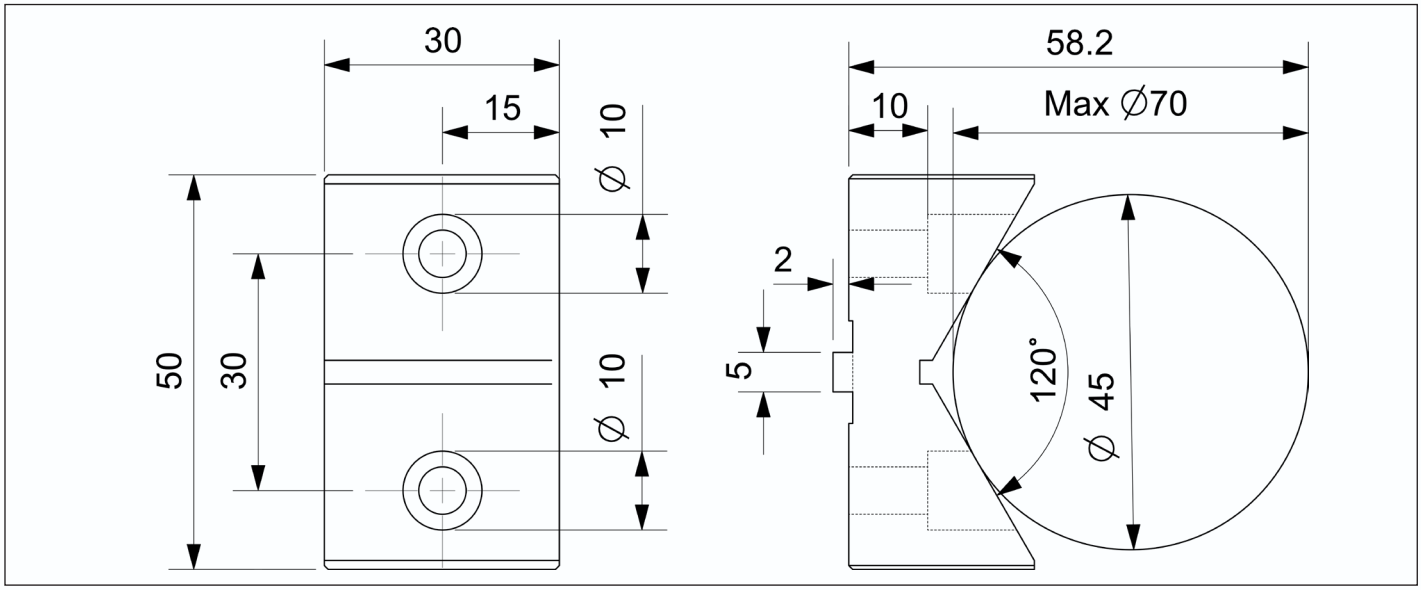

型号 Description	编号 ID	钳口宽度 A Jaw width A [mm]	钳口高度 B Jaw high B [mm]	重量 Weight [kg]
50RZ-B17FD-B	21212-FD	50	17	0.2
50RZ-B27FD-B	21213-FD	80	27	0.5
50RZ-B17MD-B	21212-MD	50	17	0.2
50RZ-B27MD-B	21213-MD	80	27	0.5

50RZ-B 型软爪 | 50RZ-B type soft jaw

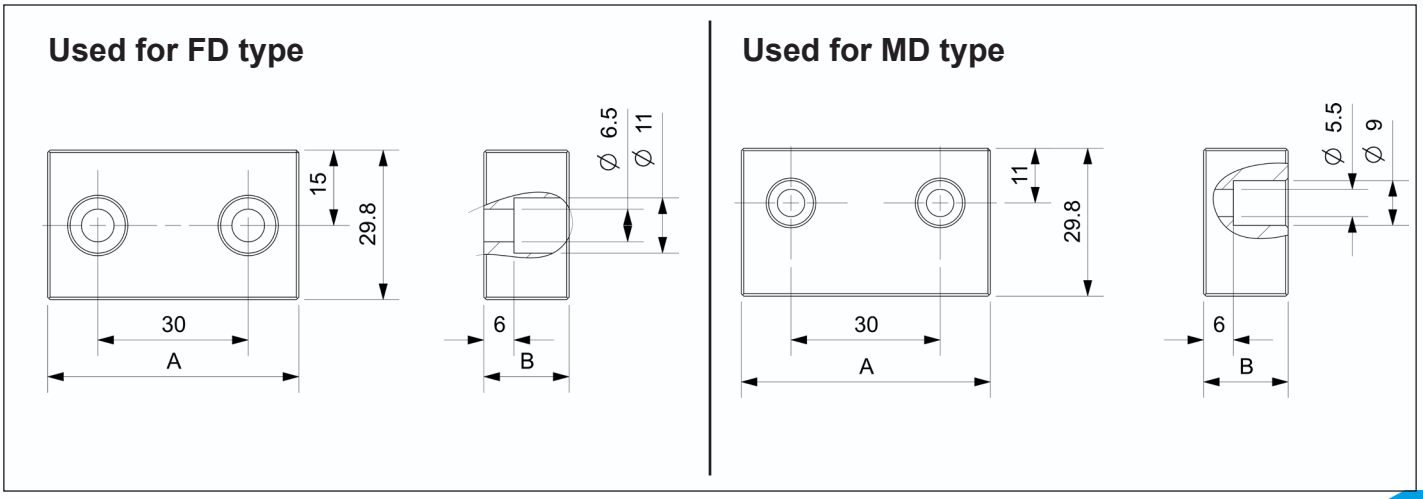

软爪

可定制生产

材料：S45C，可硬化 | 铝合金 6061
标准：螺钉固定孔 DIN EN ISO 4762
安装：通过槽

Soft claw

Customizable production

Material: S45C, hardenable | Aluminum 6061
Version: Fastening bores for screw DIN EN ISO 4762
Mounting: Via tongue and groove

型号 Description	编号 ID	钳口宽度 A Jaw width A [mm]	钳口高度 B Jaw high B [mm]	重量 Weight [kg]
50RZ-B17-A	21214	50	17	0.3
50RZ-B27-A	21215	80	27	0.5

50RZ-A 型软爪 | 50RZ-A type soft jaw

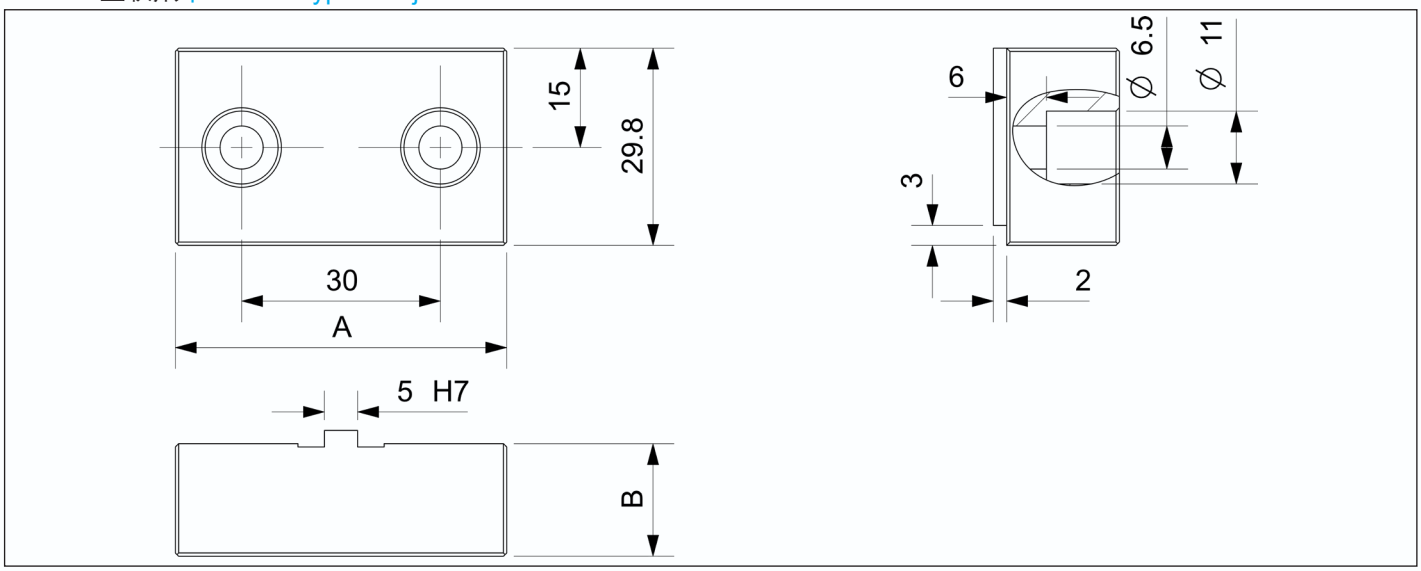

型号 Description	编号 ID	钳口宽度 A Jaw width A [mm]	钳口高度 B Jaw high B [mm]	重量 Weight [kg]
50RZ-B21-C	21216	50	21	0.4
50RZ-B34-C	21217	80	34	0.8

50RZ-C 型软爪 | 50RZ-C type soft jaw

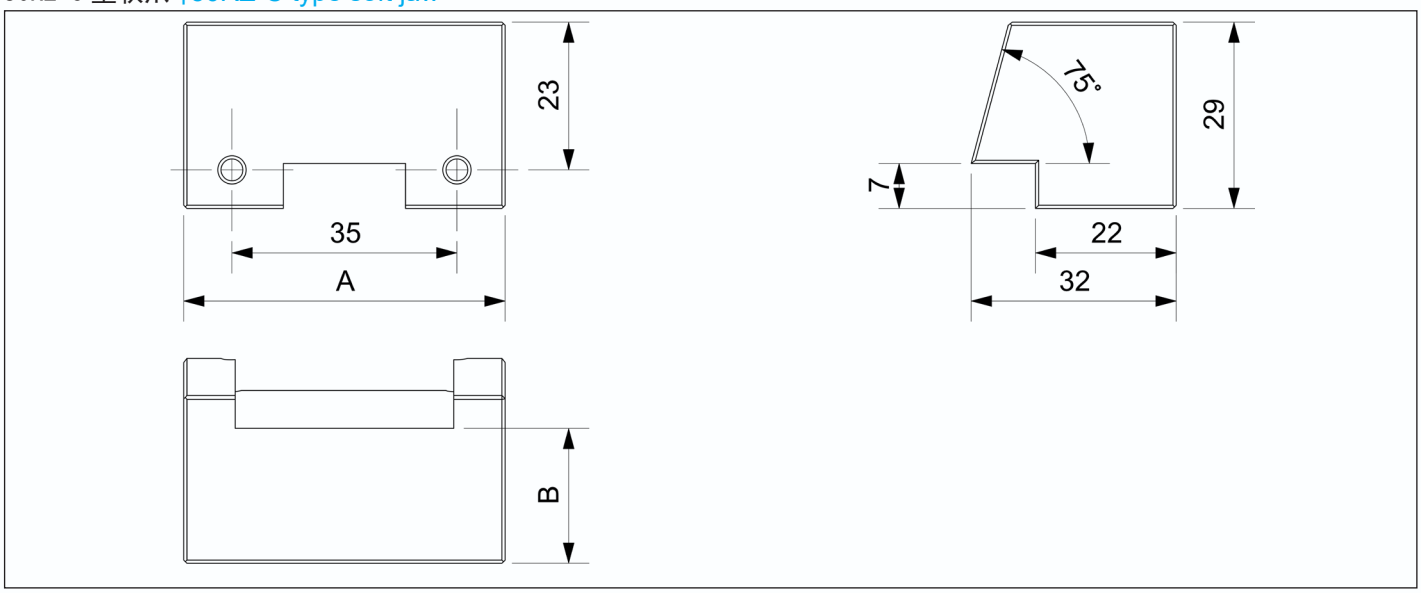

平行垫片

可定制生产

材料：4140，HRC54-58
标准：螺钉固定孔 DIN EN ISO 4762
安装：通过孔

Parallel gasket

Customizable production

Material: 4140, HRC54-58
Version: Fastening bores for screw DIN EN ISO 4762
Mounting: Installation through mounting holes

型号 Description	编号 ID	钳口宽度 A Jaw width A [mm]	钳口高度 B Jaw high B [mm]	钳口高度 C Jaw high C [mm]	重量 Weight [kg]
50DP-522	21221	50	5	22	0.05
50DP-525	21222	50	5	25	0.06
50DP-527	21223	50	5	27	0.07

50DP 平行垫块 | 50DP Parallel gasket

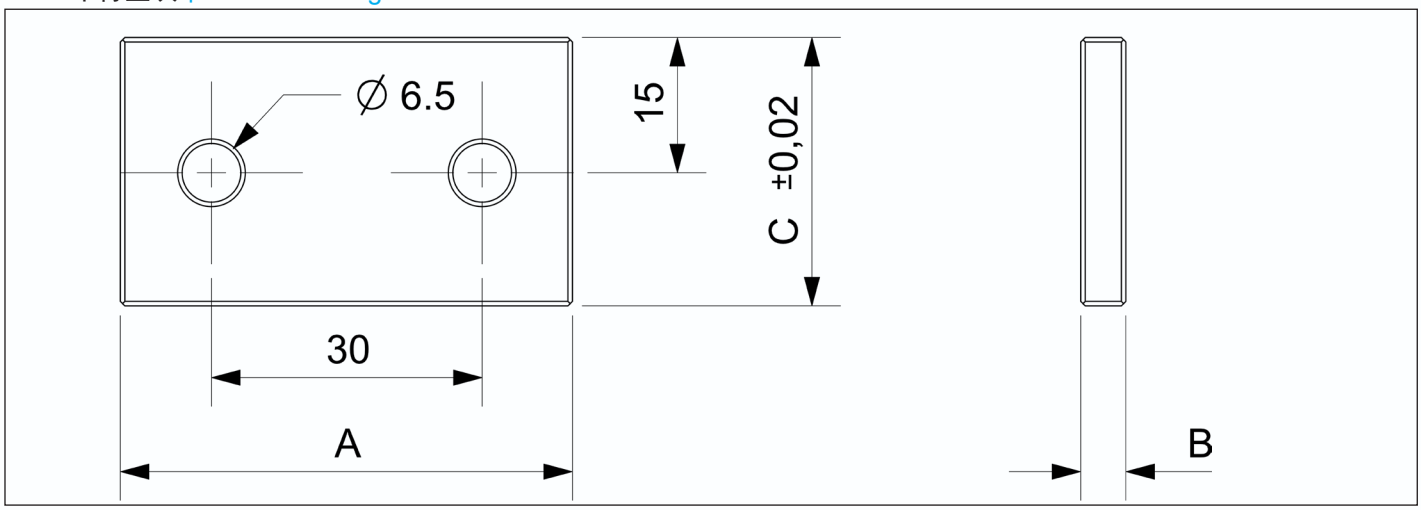

50DW 工件定位器

使用说明
确定工件的位置

50DW work positioner

Instructions for use
Determine the position of the workpiece

型号 Description	编号 ID	重量 Weight [kg]
50DW	21225	0.2

50DW 工件定位器 | 50DW work positioner

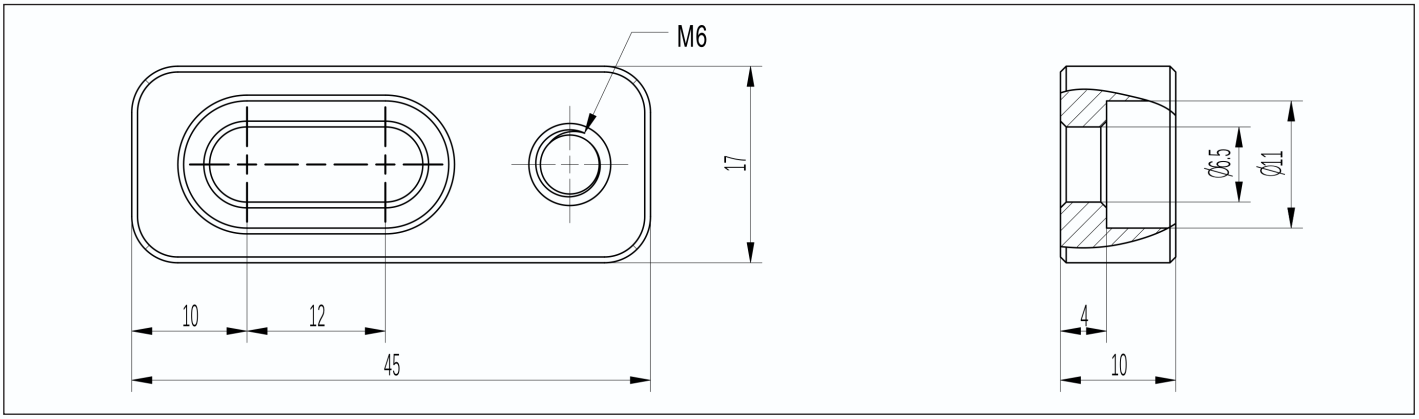

Affordable - KSD - 50

多功能虎钳 | Multi Clamping Vise

虎钳配件

可定制生产

材料：
标准：螺钉固定孔 DIN EN ISO 4762
安装：通过槽

Serrated fixed jaw

Customizable production

Material:
Version: Fastening bores for screw DIN EN ISO 4762
Mounting: Via tongue and groove

型号 Description	编号 ID	钳口宽度 A Jaw width A [mm]	钳口高度 B Jaw high B [mm]	重量 Weight [kg]
50G-MT	21250	50	50	1.3

50G-MT 齿型固定钳口 | 50G-MT serrated fixed Jaw

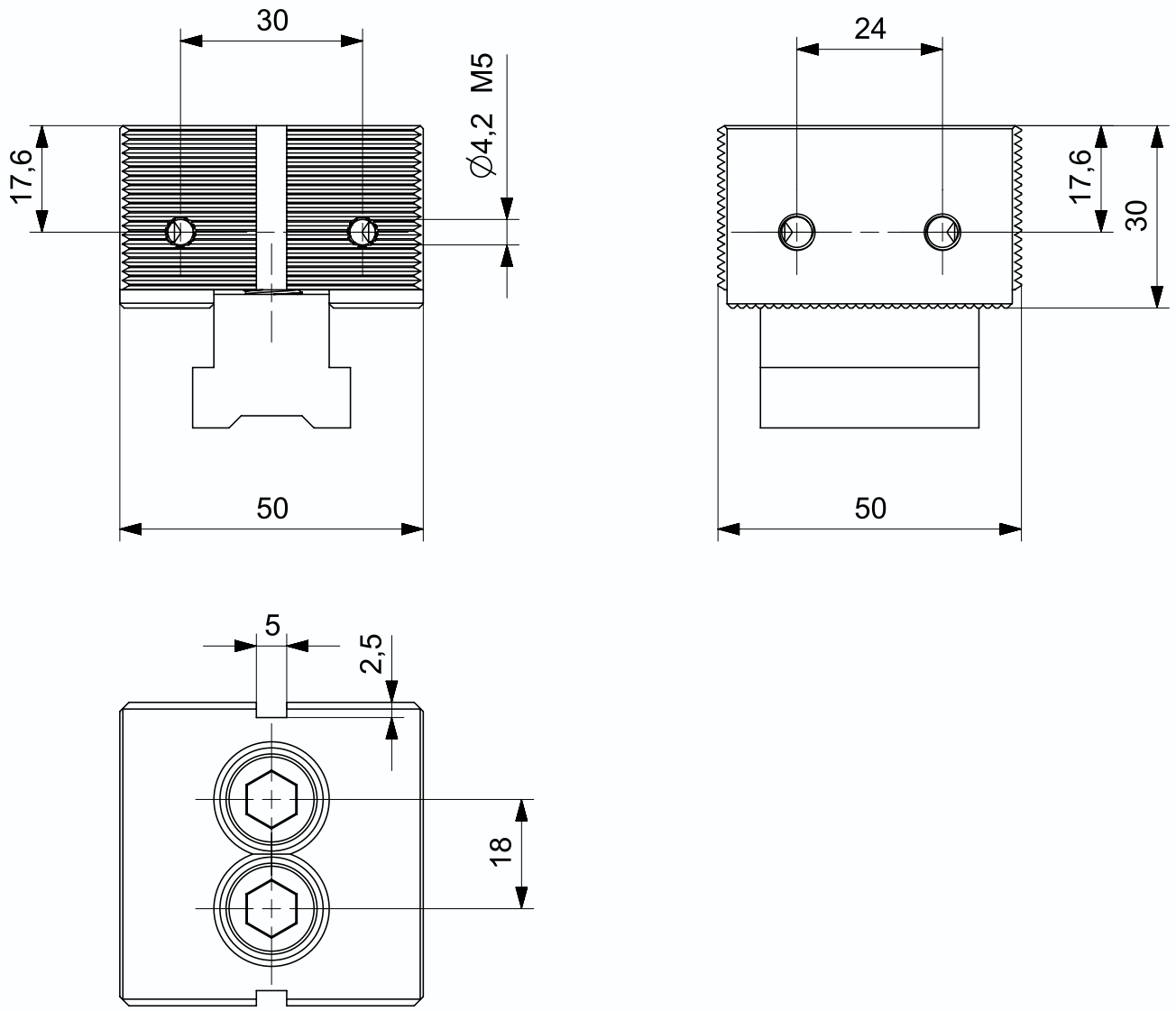

钳口配件

可定制生产

材料：4140，HRC48-52
标准：螺钉固定孔 DIN EN ISO 4762
安装：通过孔

Serrated Jaw

Customizable production

Material: 4140, HRC48-52
Version: Fastening bores for screw DIN EN ISO 4762
Mounting: Installation through mounting holes

型号 Description	编号 ID	钳口宽度 A Jaw width A [mm]	钳口高度 B Jaw high B [mm]	钳口高度 C Jaw high C [mm]	重量 Weight [kg]
50C-5010	21260	50	10	30	0.3
50C-5013	21262	50	13	32	0.5
50C-7520	21264	75	20	35	0.8

50C 齿型钳口 | 50C Serrated Jaw

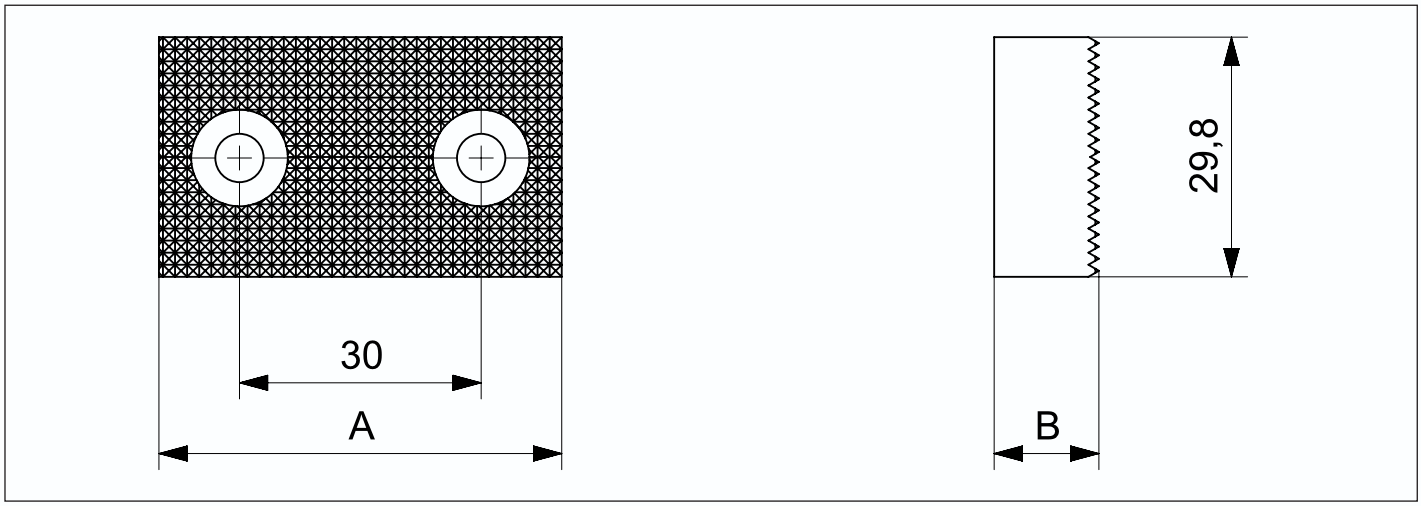

型号 Description	编号 ID	钳口宽度 A Jaw width A [mm]	钳口高度 B Jaw high B [mm]	钳口高度 C Jaw high C [mm]	钳口高度 D Jaw high D [mm]	重量 Weight [kg]
50C-5010T	21261	50	10	30	5	0.3
50C-5013T	21263	50	13	32	5	0.5
50C-7520T	21265	75	20	35	5	0.8

50C-T 齿型台阶钳口 | 50C Serrated Step Jaw

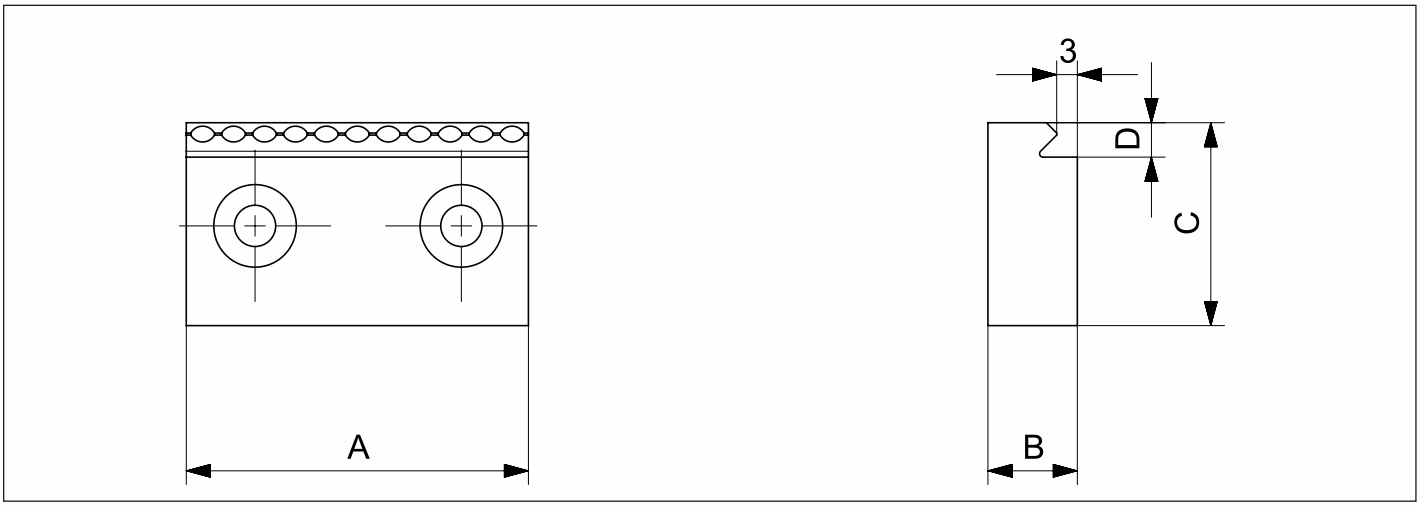

夹紧范围

Clamping Capacity

最大夹紧范围
可装夹工件最大尺寸-取决于导轨长度和夹紧区域数量。

The clamping range shows the max.
The maximum size of the workpiece that can be clamped-depends on the length of the guide rail and the number of clamping areas.

型号 Description		装夹工件数量 Number of workpieces clamped								
		1	2	3	4	5	6	7	8	9
KSD88-400	最大装夹尺寸 Maximum workpiece clamping size	267	92	33						
KSD88-500		367	142	67	29					
KSD88-600		467	192	100	54	27				
KSD88-650		517	217	117	67	37	17			
KSD88-700		567	242	133	79	47	25	10		

FD 型 可调式平面钳口

FD TYPE Adjustable jaws with Parallel plane

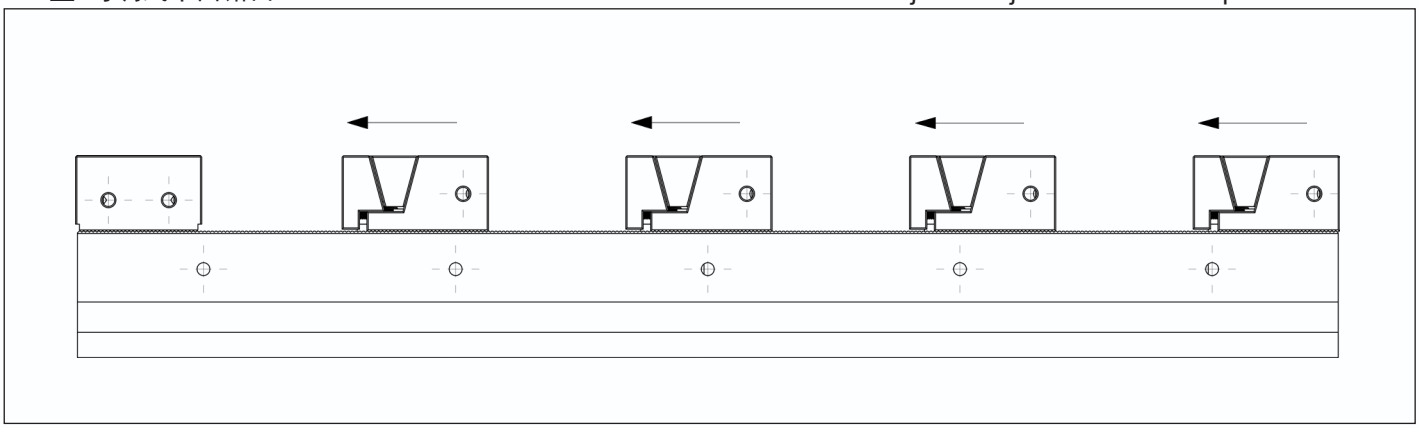

型号 Description		装夹工件数量 Number of workpieces clamped								
		1	2	3	4	5	6	7	8	9
KSD88-400	最大装夹尺寸 Maximum workpiece clamping size	272	97	38	9.5					
KSD88-500		372	147	72	34	12				
KSD88-600		472	197	105	59	32	13			
KSD88-650		522	222	122	72	42	22	7		8
KSD88-700		572	247	138	84	52	30	15		13

FD-T 型 可调式齿形台阶钳口

FD-T TYPE Adjustable jaws with Toothed steps

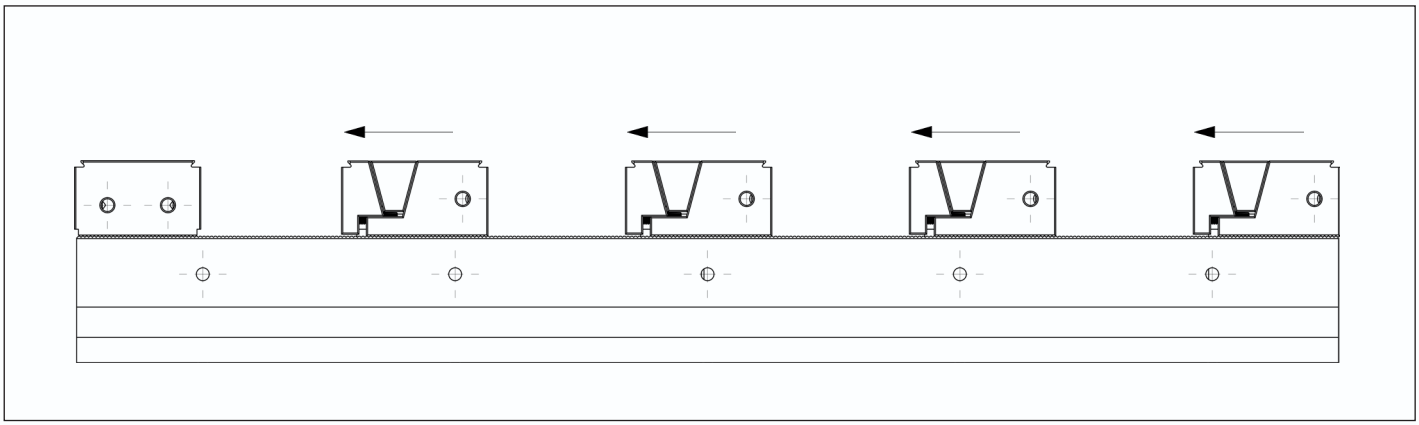

夹紧范围

Clamping Capacity

最大夹紧范围
可装夹工件最大尺寸-取决于导轨长度和夹紧区域数量。

The clamping range shows the max.
The maximum size of the workpiece that can be clamped-depends on the length of the guide rail and the number of clamping areas.

型号 Description		夹持工件数量 Number of workpieces clamped						
		2	4	6	8	10	12	14
KSD88-400	最大装夹尺寸 Maximum workpiece clamping size	113	26					
KSD88-500		163	51	14				
KSD88-600		213	76	30	10			
KSD88-650		238	88	38	18			
KSD88-700		263	101	47	27	5		

MD 型 楔形夹爪

MD TYPE With wedge clamping jaws

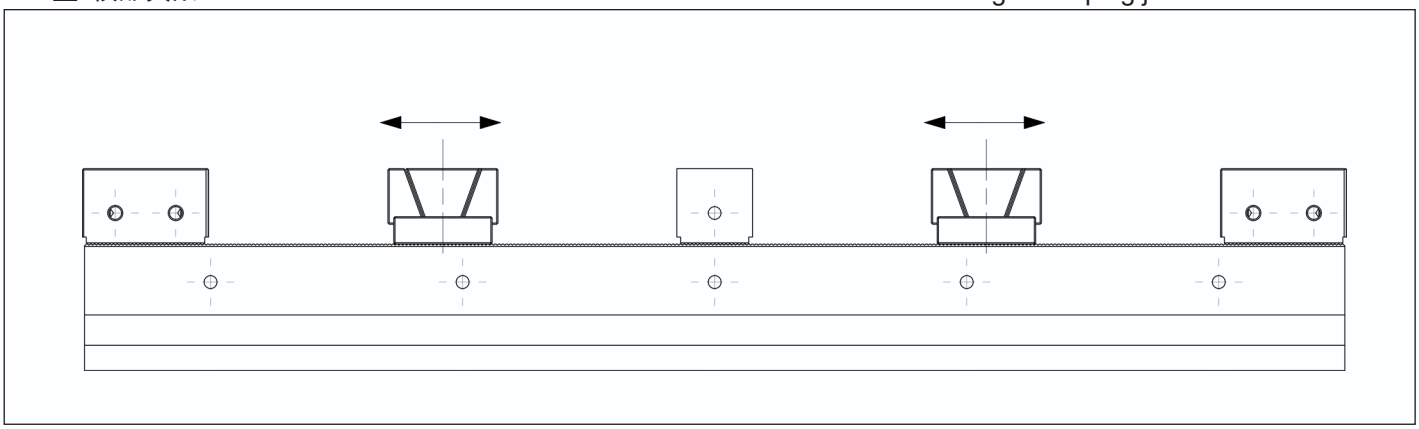

型号 Description		夹持工件数量 Number of workpieces clamped						
		2	4	6	8	10	12	14
KSD88-400	最大装夹尺寸 Maximum workpiece clamping size	118	31					
KSD88-500		168	56	19				
KSD88-600		218	81	35	15			
KSD88-650		243	93	43	23			
KSD88-700		268	106	52	32	10		

MD-T 型 齿式阶梯楔形夹爪

MD-T TYPE With Stepped wedge clamping jaws

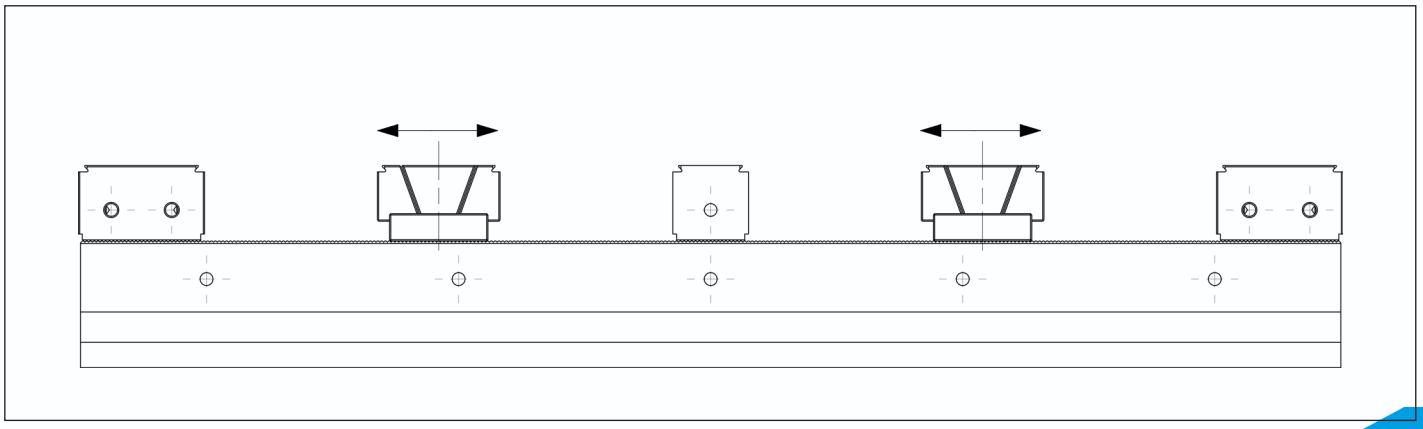

Affordable - KSD - 88

多功能虎钳 | Multi Clamping Vise

夹紧轨道
无系统钳口

Clamping Rail
Without system jaws

供货范围
夹紧轨道和操作手册； 不含夹紧钳口和固定钳口

Scope of delivery
Clamping rail inclusive operating manual; without system jaws

型号 Description	编号 ID	轨道宽度 Rail width [mm]	夹紧力 Clamping force [kN]	最高扭力 Max. torque [N.m]	重量 Weight [kg]
KSD88-400	21510	88	35.6	80(FD)	14

使用其他钳口时，夹紧范围可能会有所不同。

When using other jaws the clamping range can differ.

KSD-88-400-**FD TYPE**

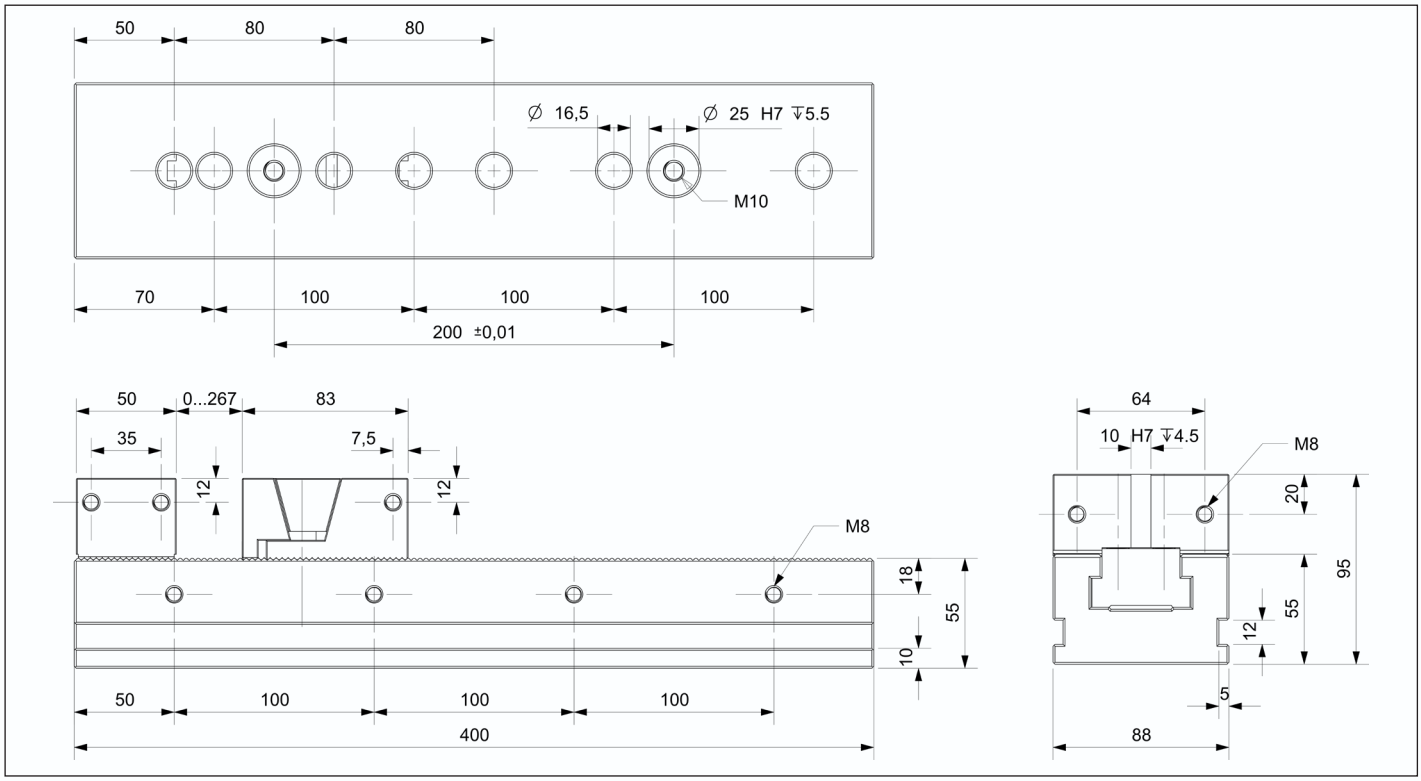

KSD-88-400-**MD TYPE**

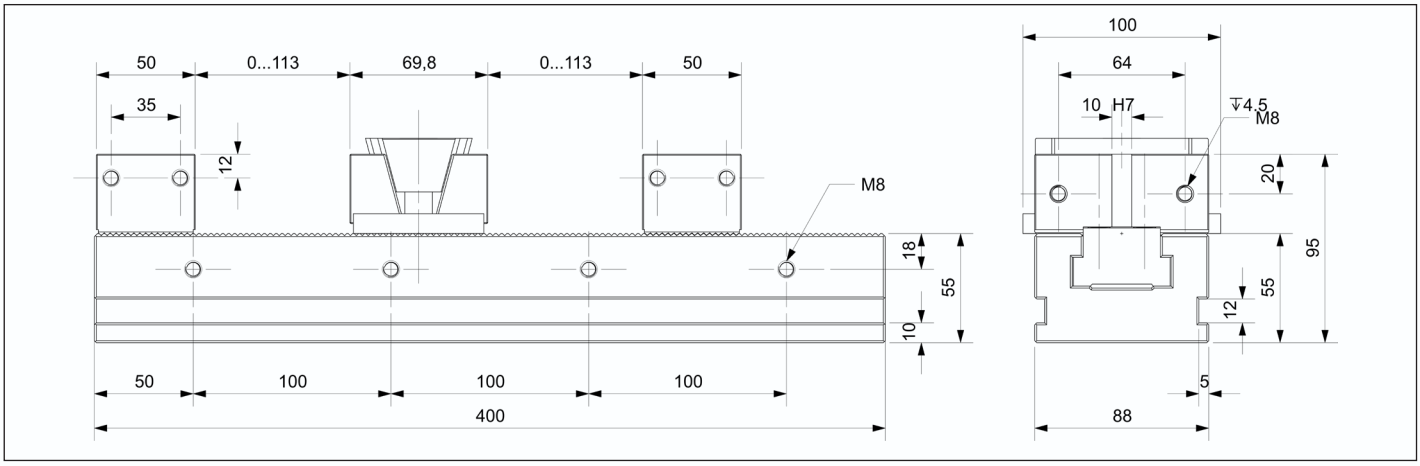

夹紧轨道
无系统钳口

Clamping Rail
Without system jaws

供货范围
夹紧轨道和操作手册； 不含夹紧钳口和固定钳口

Scope of delivery
Clamping rail inclusive operating manual; without system jaws

型号 Description	编号 ID	轨道宽度 Rail width [mm]	夹紧力 Clamping force [kN]	最高扭力 Max. torque [N.m]	重量 Weight [kg]
KSD88-500	21520	88	35.6	80(FD)	17

使用其他钳口时，夹紧范围可能会有所不同。

When using other jaws the clamping range can differ.

KSD-88-500-**FD TYPE**

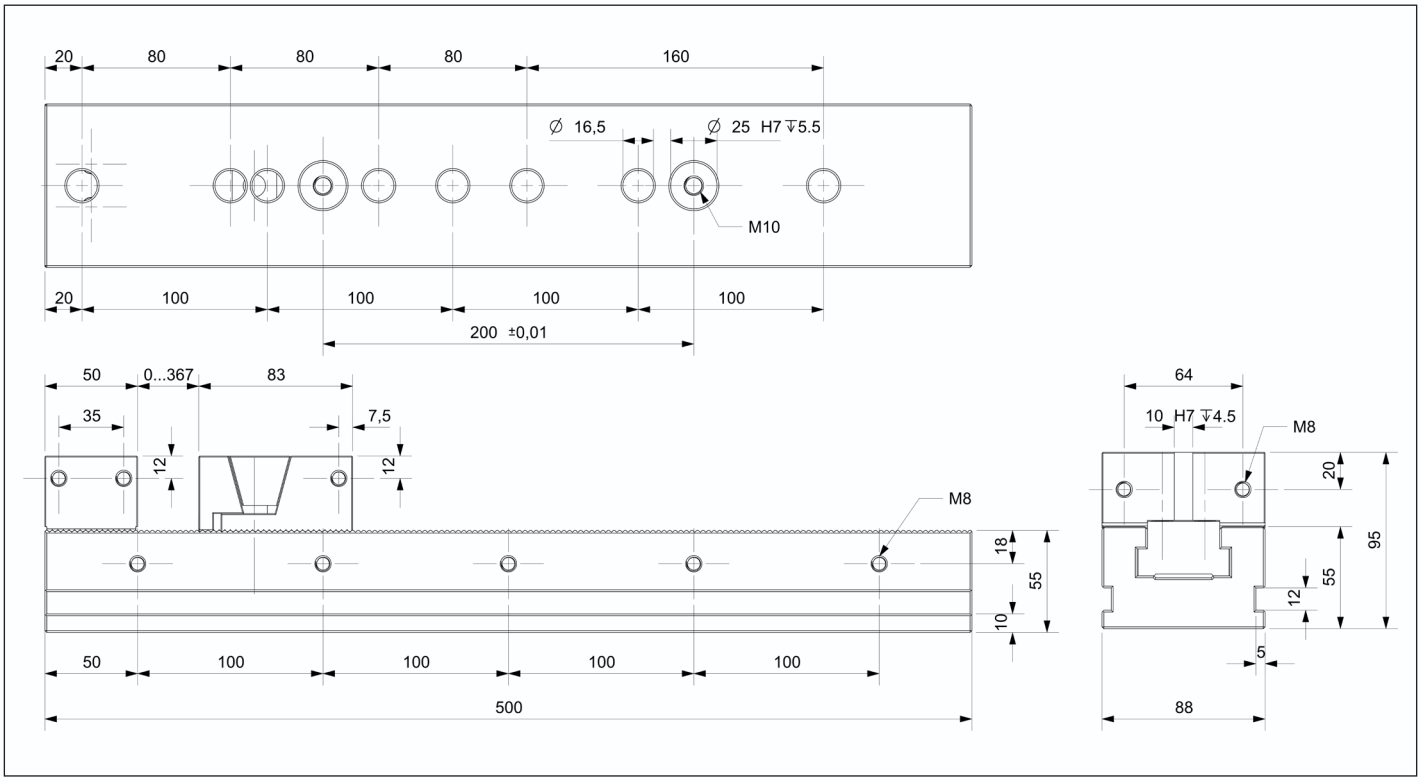

KSD-88-500-**MD TYPE**

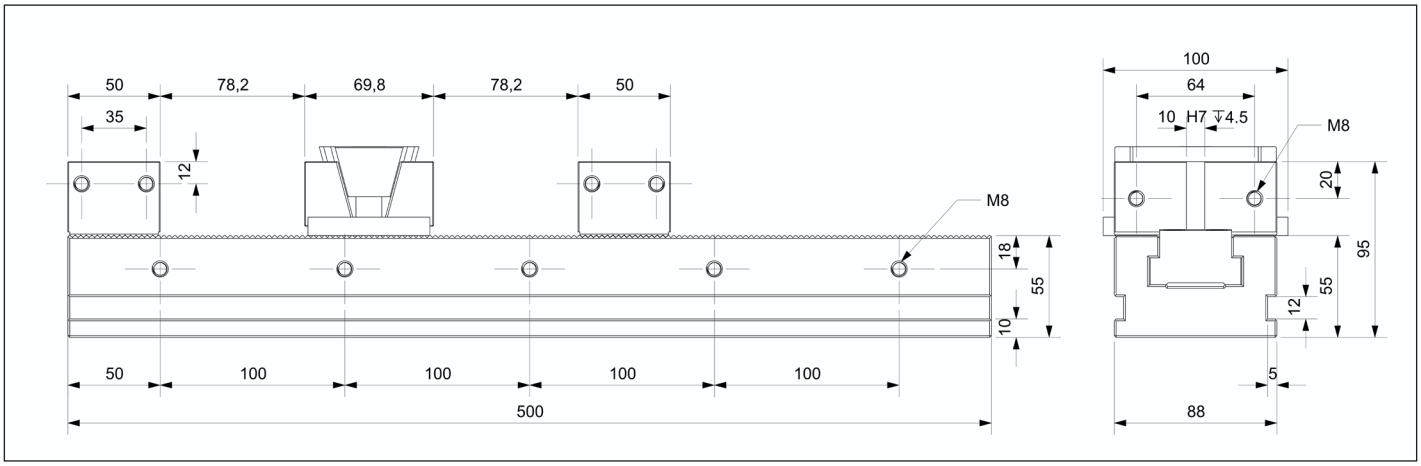

Affordable - KSD - 88

多功能虎钳 | Multi Clamping Vise

夹紧轨道
无系统钳口

Clamping Rail
Without system jaws

供货范围
夹紧轨道和操作手册； 不含夹紧钳口和固定钳口

Scope of delivery
Clamping rail inclusive operating manual; without system jaws

型号 Description	编号 ID	轨道宽度 Rail width [mm]	夹紧力 Clamping force [kN]	最高扭力 Max. torque [N.m]	重量 Weight [kg]
KSD88-600	21530	88	35.6	80(FD)	19

使用其他钳口时，夹紧范围可能会有所不同。

When using other jaws the clamping range can differ.

KSD-88-600-**FD TYPE**

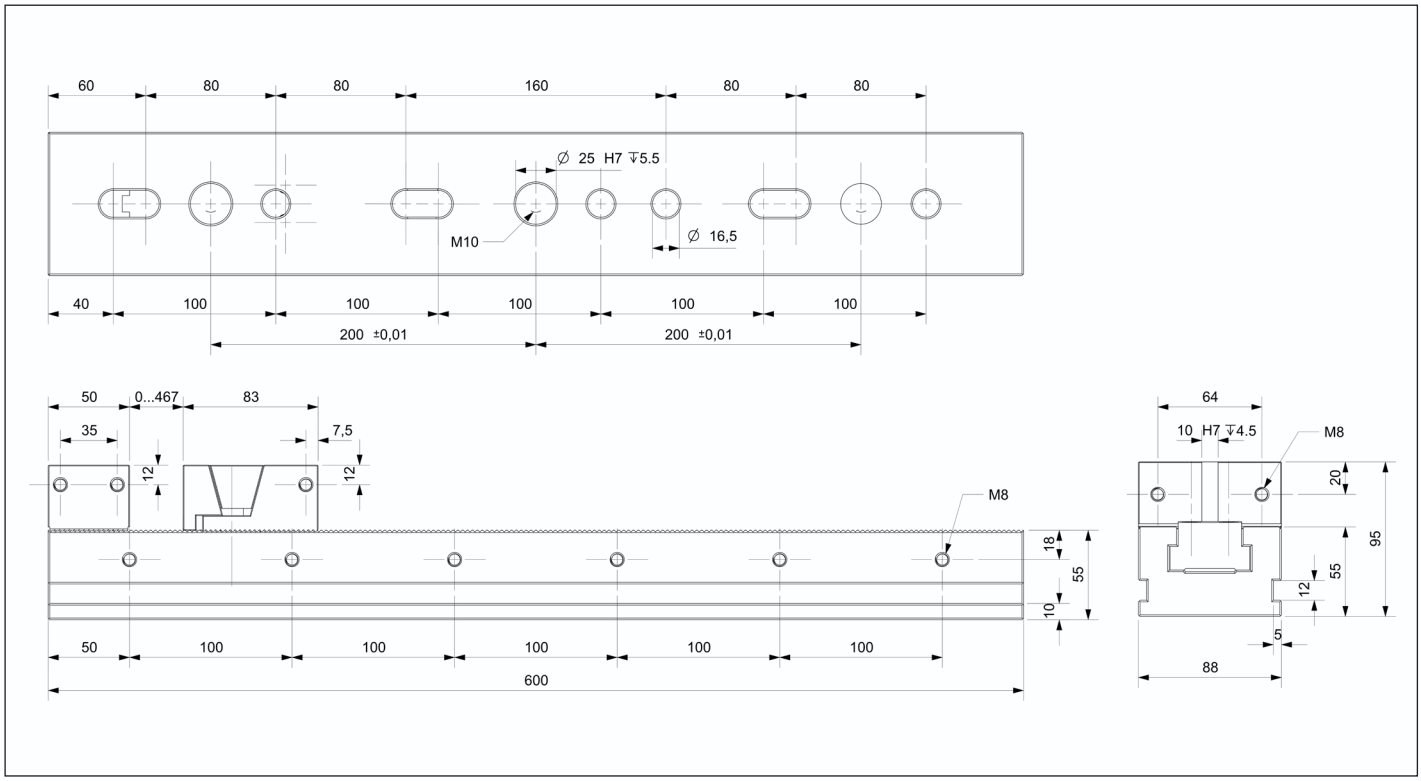

KSD-88-600-**MD TYPE**

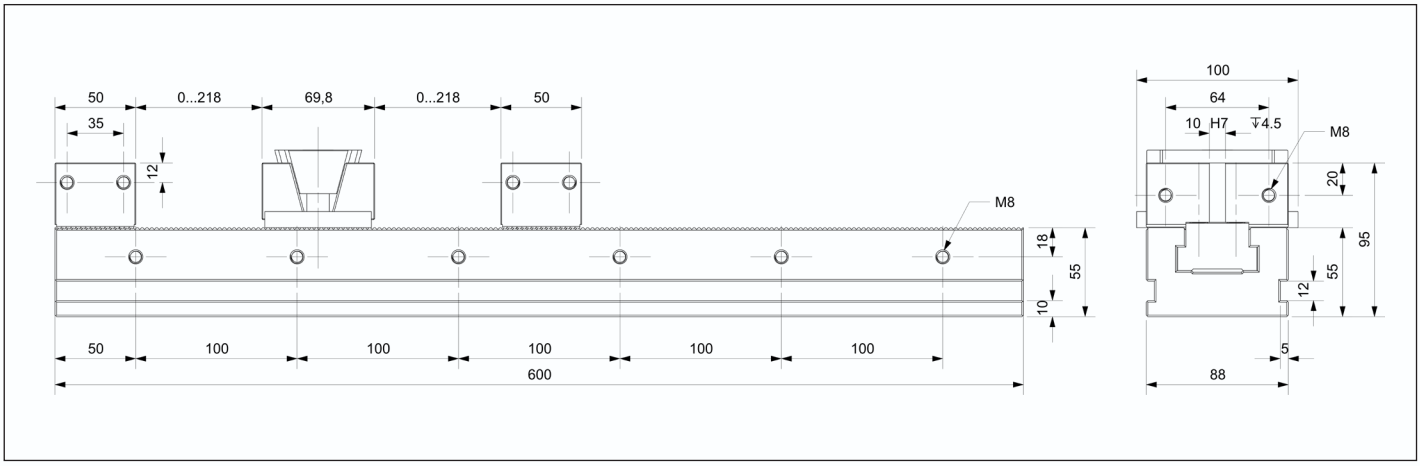

夹紧轨道
无系统钳口

Clamping Rail
Without system jaws

供货范围
夹紧轨道和操作手册； 不含夹紧钳口和固定钳口

Scope of delivery
Clamping rail inclusive operating manual; without system jaws

型号 Description	编号 ID	轨道宽度 Rail width [mm]	夹紧力 Clamping force [kN]	最高扭力 Max. torque [N.m]	重量 Weight [kg]
KSD88-650	21540	88	35.6	80(FD)	21

使用其他钳口时，夹紧范围可能会有所不同。

When using other jaws the clamping range can differ.

KSD-88-650-**FD TYPE**

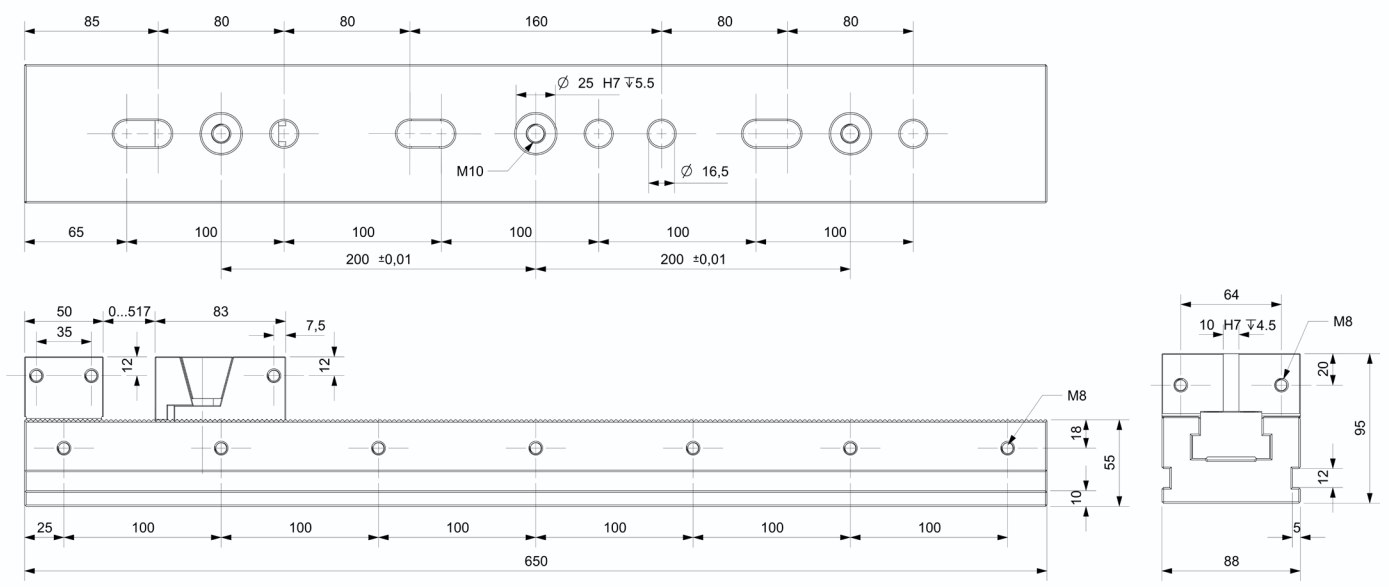

KSD-88-650-**MD TYPE**

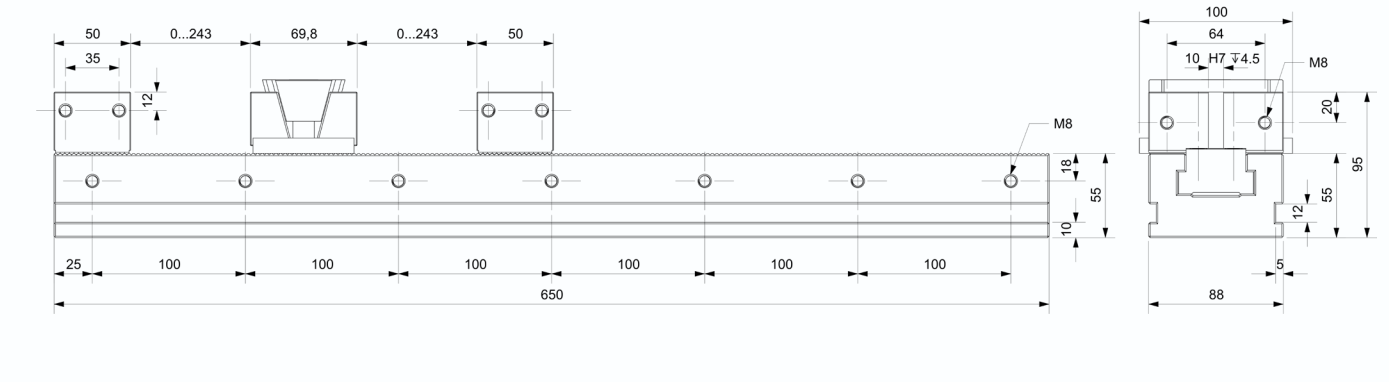

Affordable - KSD - 88

多功能虎钳 | Multi Clamping Vise

夹紧轨道
无系统钳口

Clamping Rail
Without system jaws

供货范围
夹紧轨道和操作手册； 不含夹紧钳口和固定钳口

Scope of delivery
Clamping rail inclusive operating manual; without system jaws

型号 Description	编号 ID	轨道宽度 Rail width [mm]	夹紧力 Clamping force [kN]	最高扭力 Max. torque [N.m]	重量 Weight [kg]
KSD88-700	21550	88	35.6	80(FD)	22

使用其他钳口时，夹紧范围可能会有所不同。

When using other jaws the clamping range can differ.

KSD-88-700-**FD TYPE**

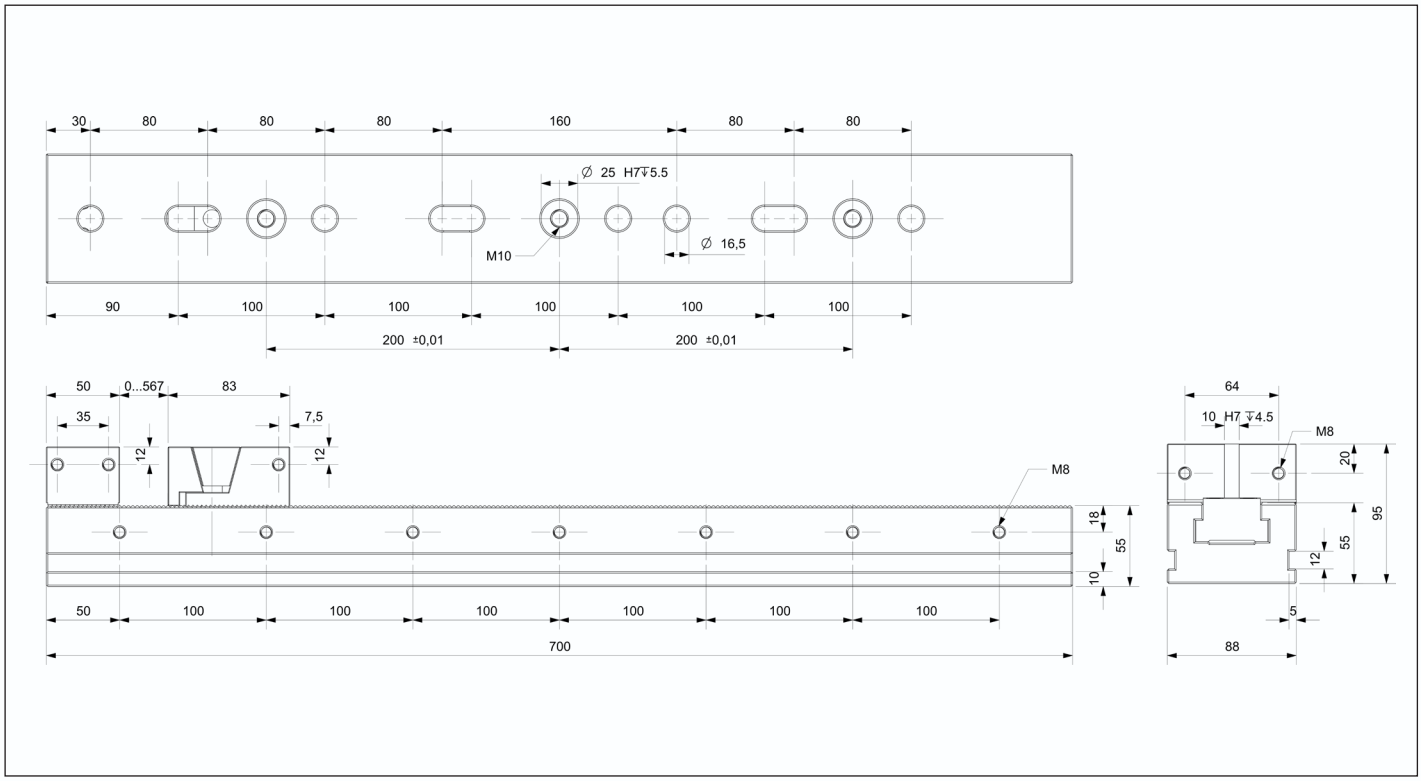

KSD-88-700-**MD TYPE**

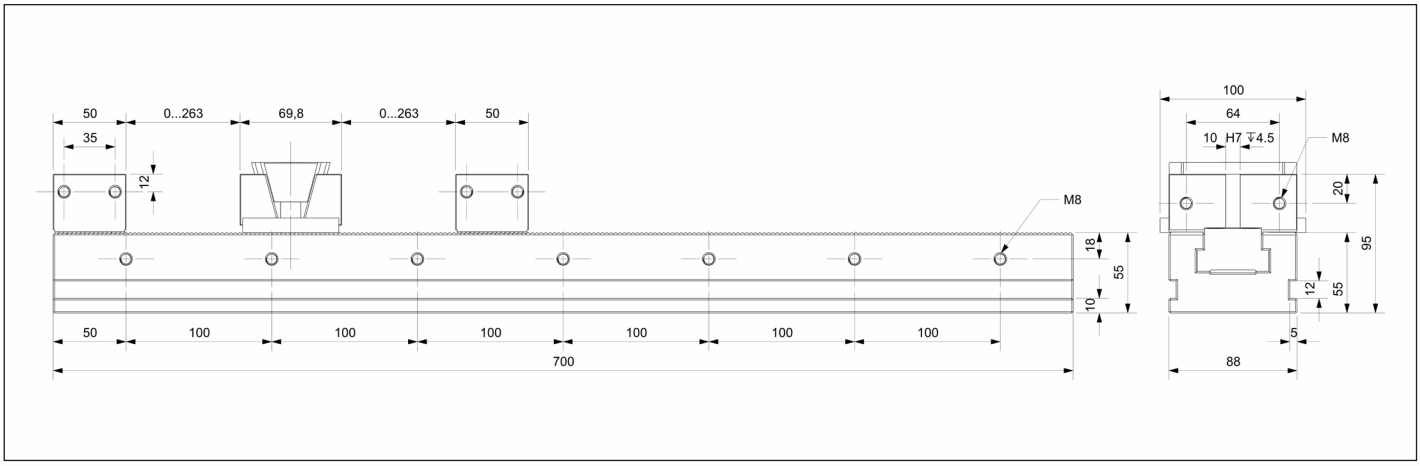

单向夹紧
不含夹紧轨道

One-way Clamping
Without Clamping Rail

供货范围
单项夹紧模块和操作手册； 不含夹紧轨道

Scope of delivery
One-way Clamping inclusive operating manual; without Clamping Rail

型号 Description	编号 ID	钳口宽度 Jaw width [mm]	夹紧力 Clamping force [kN]	最高扭力 Max. torque [N.m]	重量 Weight [kg]
88FD	21600	50	35.6	80	2.5
88FD-T	21601	50	35.6	80	2.5

88FD 型单向夹紧钳口 |88FD type unidirectional clamping jaw

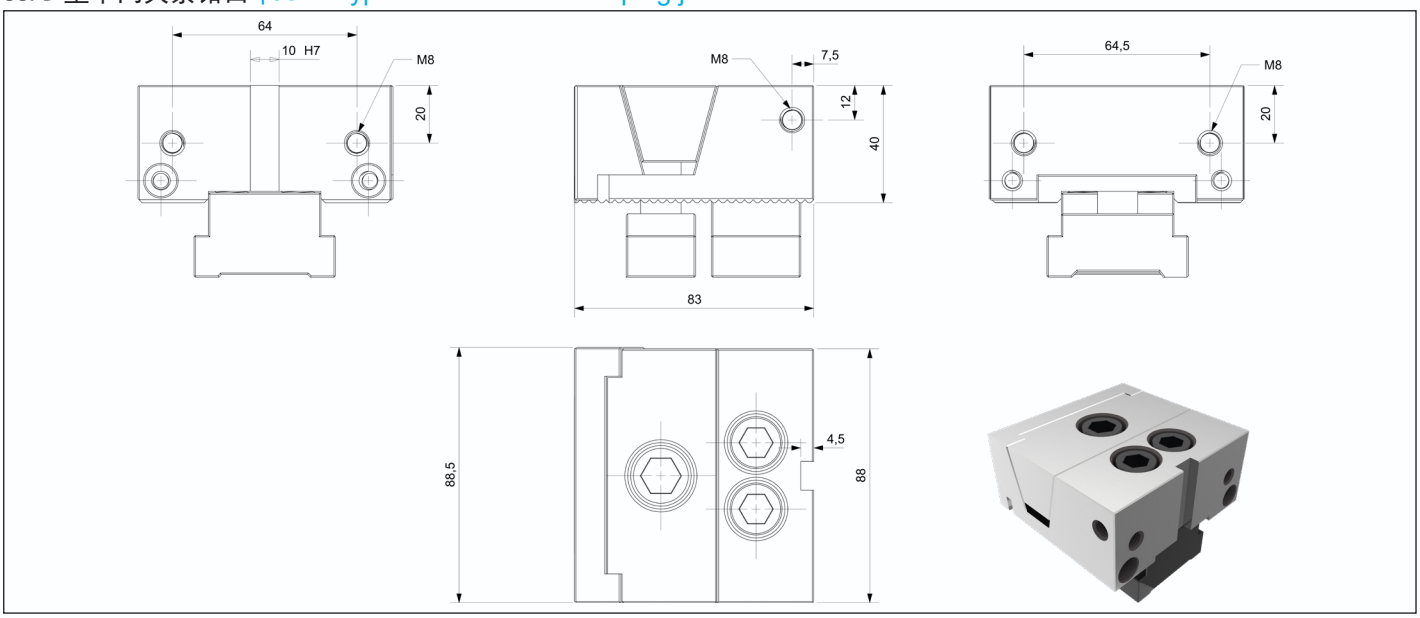

88FD-T 锯齿形型单向夹紧钳口 |88FD-T Jagged type unidirectional clamping jaw

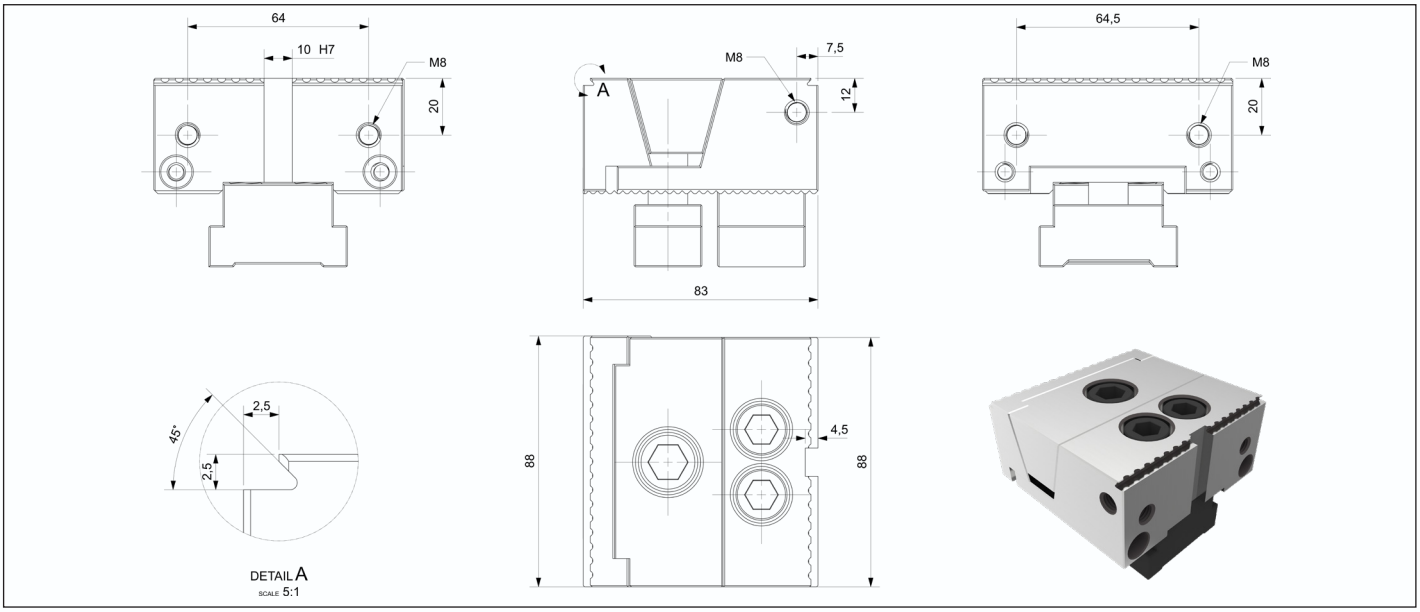

Affordable - KSD - 88

多功能虎钳 | Multi Clamping Vise

双向夹紧
不含夹紧轨道

Two-way Clamping
Without Clamping Rail

供货范围
双向项夹紧模块和操作手册； 不含夹紧轨道

Scope of delivery
Two-way Clamping inclusive operating manual; without Clamping Rail

型号 Description	编号 ID	钳口宽度 Jaw width [mm]	夹紧力 Clamping force [kN]	最高扭力 Max. torque [N.m]	重量 Weight [kg]
88MD	21602	88	-	80	2.1
88MD-T	21603	88	-	80	2.1

88MD 型双向夹紧钳口 |88MD type Bidirectional Clamping Jaw

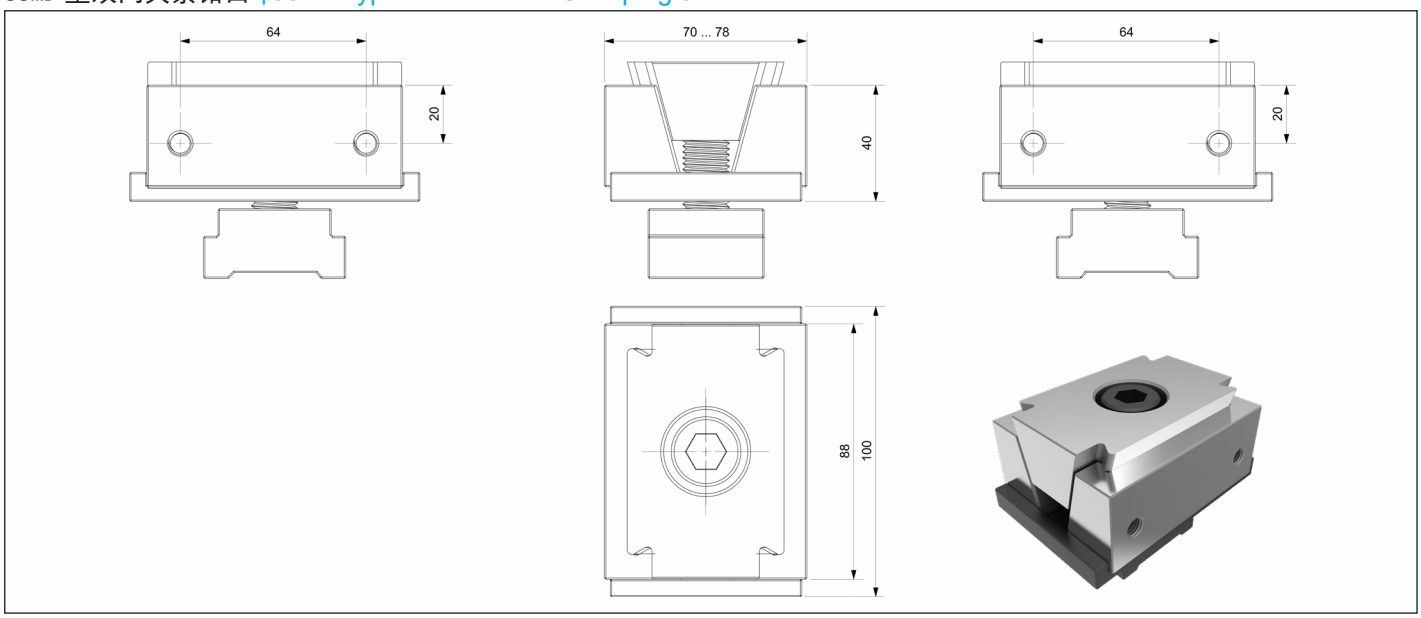

88MD-T 锯齿型双向夹紧钳口 |88MD-T Jagged type Bidirectional Clamping Jaw

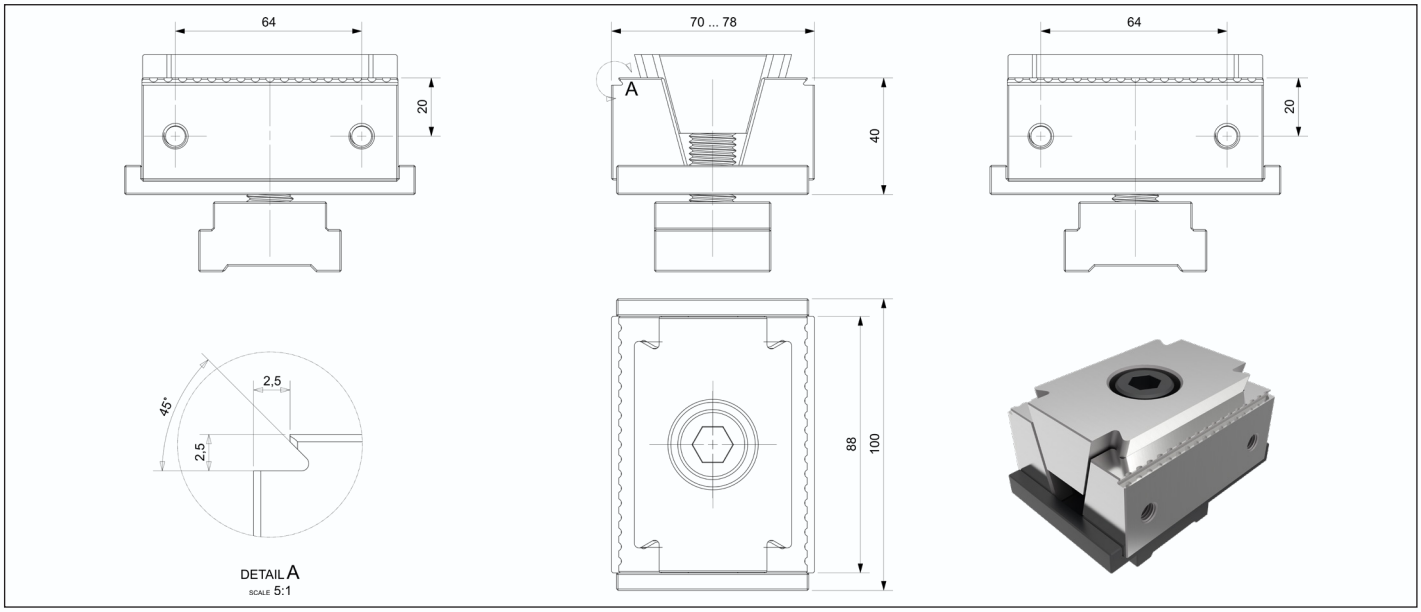

固定钳口
不含夹紧轨道

Fixed jaw
Without Clamping Rail

供货范围
固定钳口和操作手册； 不含夹紧轨道

Scope of delivery
Fixed jaw inclusive operating manual; without Clamping Rail

型号 Description	编号 ID	钳口宽度 Jaw width [mm]	夹紧力 Clamping force [kN]	最高扭力 Max. torque [N.m]	重量 Weight [kg]
88G	21604	88	-	80	1.5
88G-T	21605	88	-	80	1.5

88G 固定钳口 | 88G type unidirectional clamping jaw

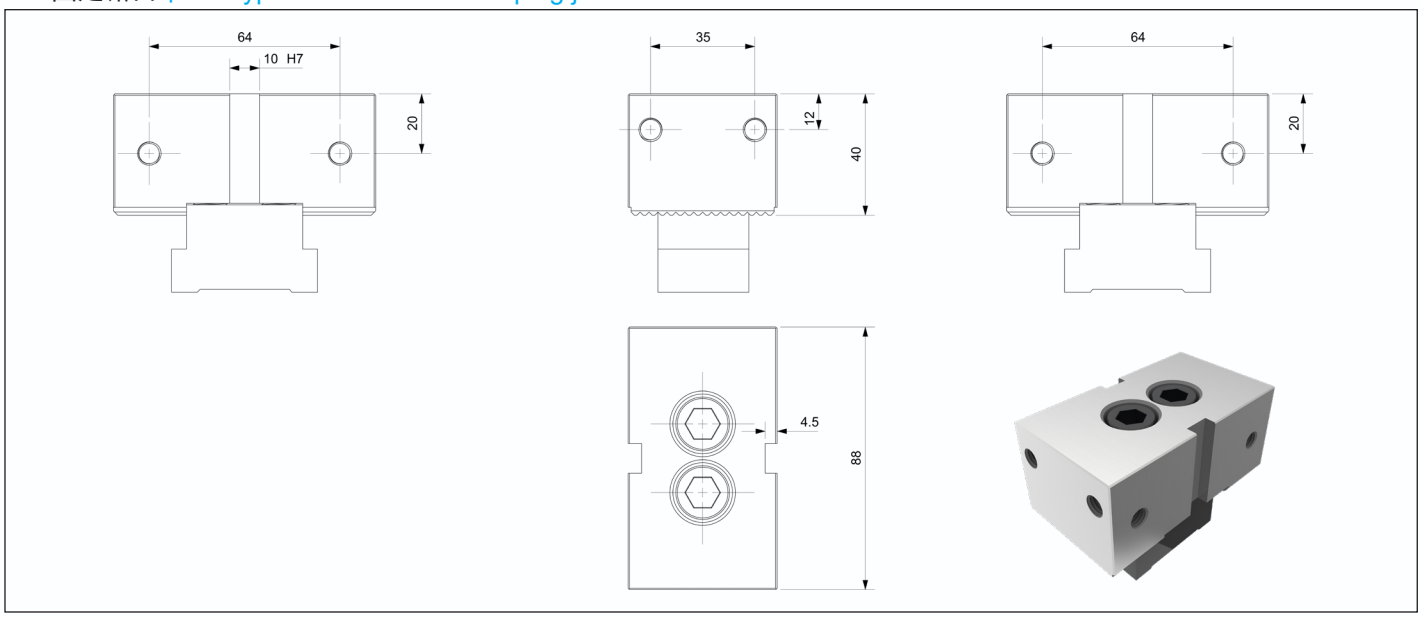

88G-T 锯齿型固定钳口 | 88G-T Jagged fixed jaw

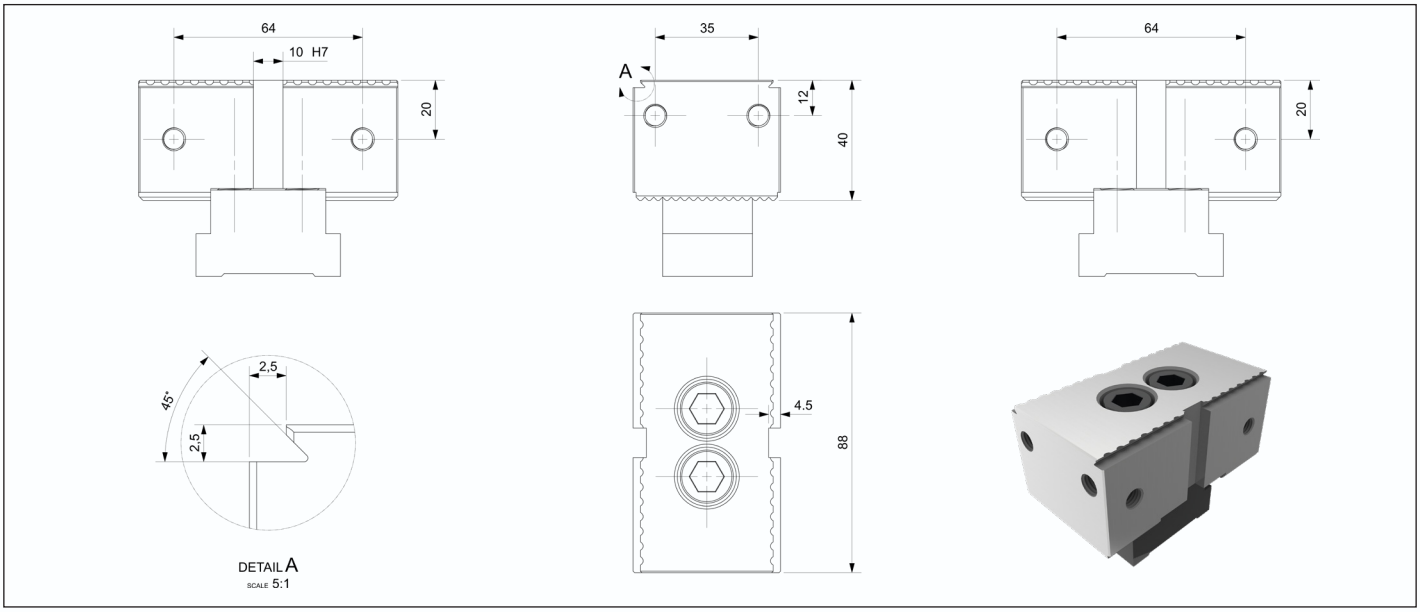

软爪

可定制生产

材料：S45C，可硬化 | 铝合金 6061
标准：螺钉固定孔 DIN EN ISO 4762
安装：通过槽

Soft claw

Customizable production

Material: S45C, hardenable | Aluminum 6061
Version: Fastening bores for screw DIN EN ISO 4762
Mounting: Via tongue and groove

型号 Description	编号 ID	钳口宽度 A Jaw width A [mm]	钳口高度 B Jaw high B [mm]	重量 Weight [kg]
88RZ-B25-A	21610	88	25	0.9
88RZ-B30-A	21611	120	30	1.2

88RZ-A 型软爪 | 88RZ-A type soft jaw

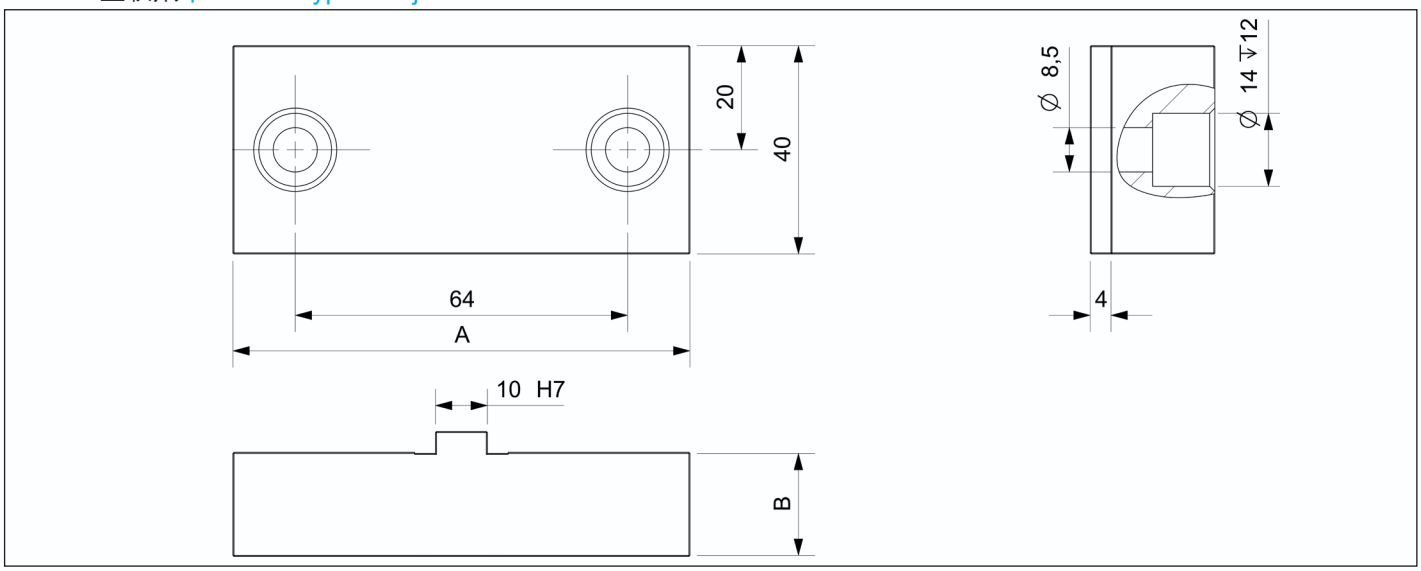

型号 Description	编号 ID	钳口宽度 A Jaw width A [mm]	钳口高度 B Jaw high B [mm]	重量 Weight [kg]
88RZ-B25-C	21615	88	25	1.2
88RZ-B40-C	21616	120	40	1.9

88RZ-C 型软爪 | 88RZ-C type soft jaw

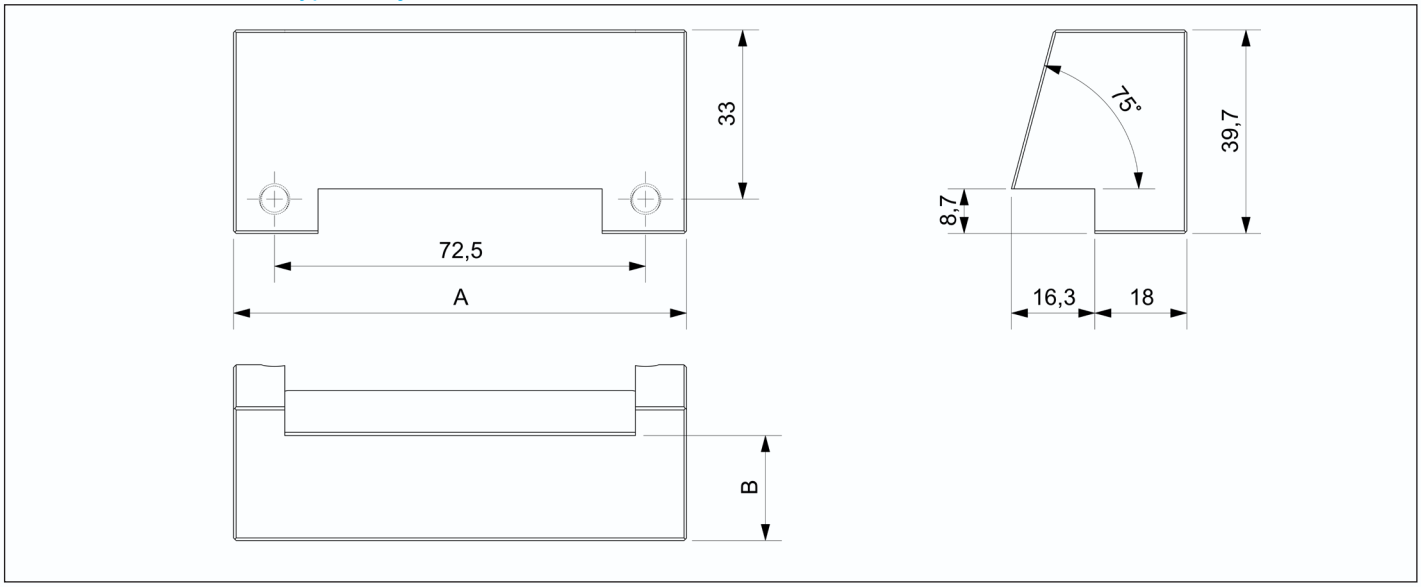

软爪
可定制生产

材料：S45C，可硬化 | 铝合金 6061
标准：螺钉固定孔 DIN EN ISO 4762
安装：通过槽

Soft claw
Customizable production

Material: S45C, hardenable | Aluminum 6061
Version: Fastening bores for screw DIN EN ISO 4762
Mounting: Via tongue and groove

型号 Description	编号 ID	钳口宽度 Jaw width [mm]	装夹范围 Clamping range [mm]	重量 Weight [kg]
88RZ-V	21620	88	MAX Φ120	0.8

88RZ-V 型软爪 | 88RZ-V type unidirectional clamping jaw

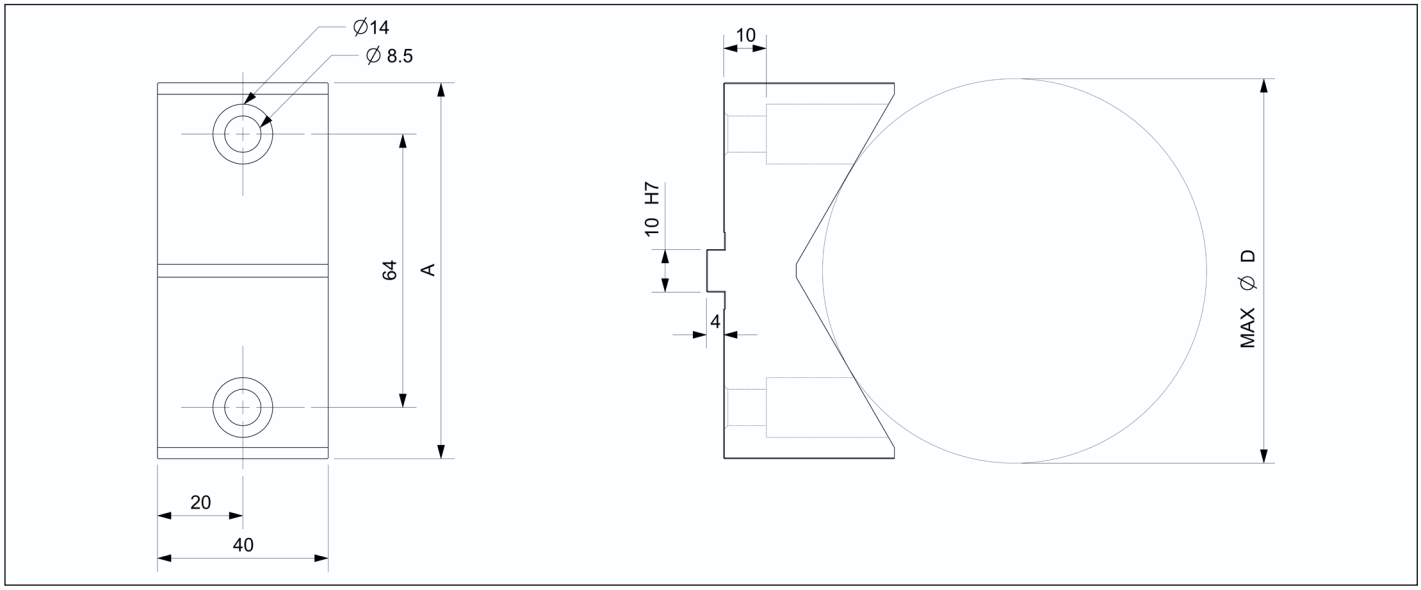

型号 Description	编号 ID	钳口宽度 A Jaw width A [mm]	钳口高度 B Jaw high B [mm]	重量 Weight [kg]
88RZ-B25-B	21625	88	25	0.9
88RZ-B30-B	21626	120	30	1.2

88RZ-B 型软爪 | 88RZ-B type soft jaw

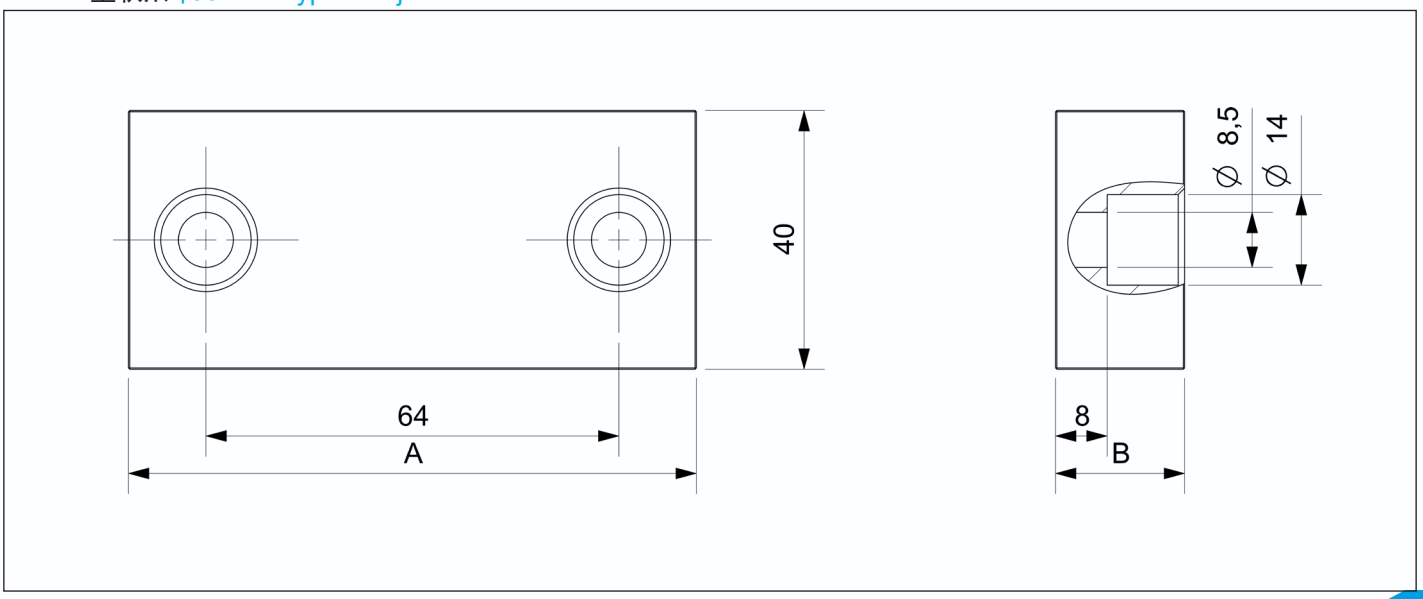

平行垫片

可定制生产

材料：4140，HRC54-58
标准：螺钉固定孔 DIN EN ISO 4762
安装：通过孔

Parallel gasket

Customizable production

Material: 4140, HRC54-58
Version: Fastening bores for screw DIN EN ISO 4762
Mounting: Installation through mounting holes

型号 Description	编号 ID	钳口宽度 A Jaw width A [mm]	钳口高度 B Jaw high B [mm]	钳口高度 C Jaw high C [mm]	重量 Weight [kg]
88DP-530	21630	88	5	30	0.09
88DP-535	21631	88	5	35	0.10
88DP-337	21632	88	3	37	0.15

88DP 平行垫块 | 88DP Parallel gasket

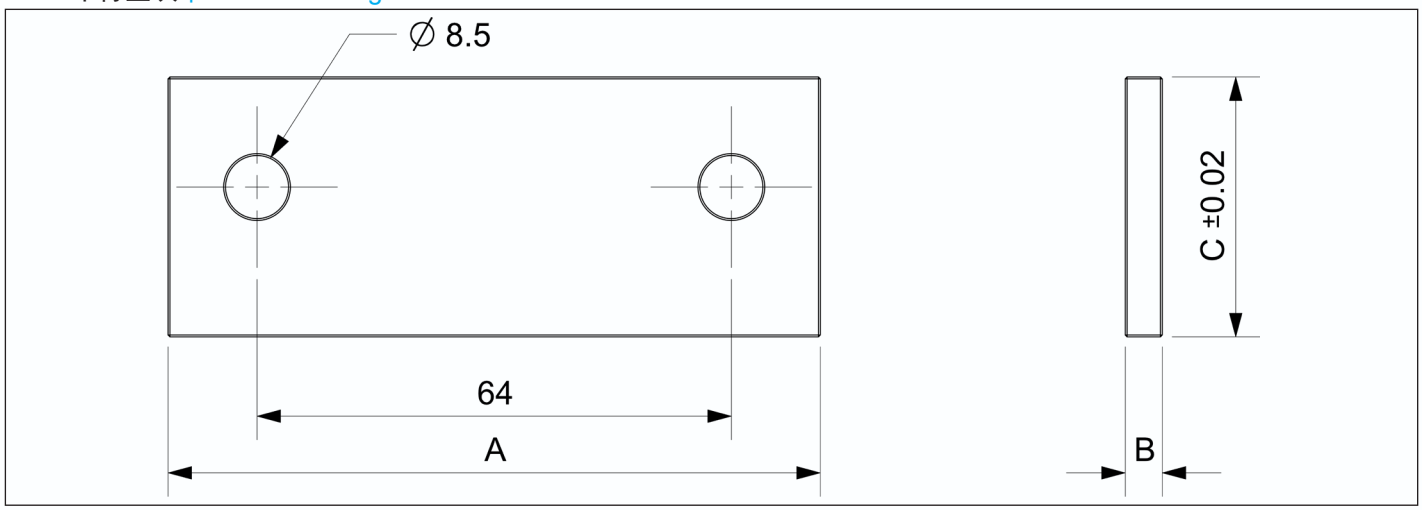

88DW 工件定位器

使用说明
确定工件的位置

88DW work positioner

Instructions for use
Determine the position of the workpiece

型号 Description	编号 ID	重量 Weight [kg]
88DW	21225	0.2

88DW 工件定位器 | 88DW work positioner

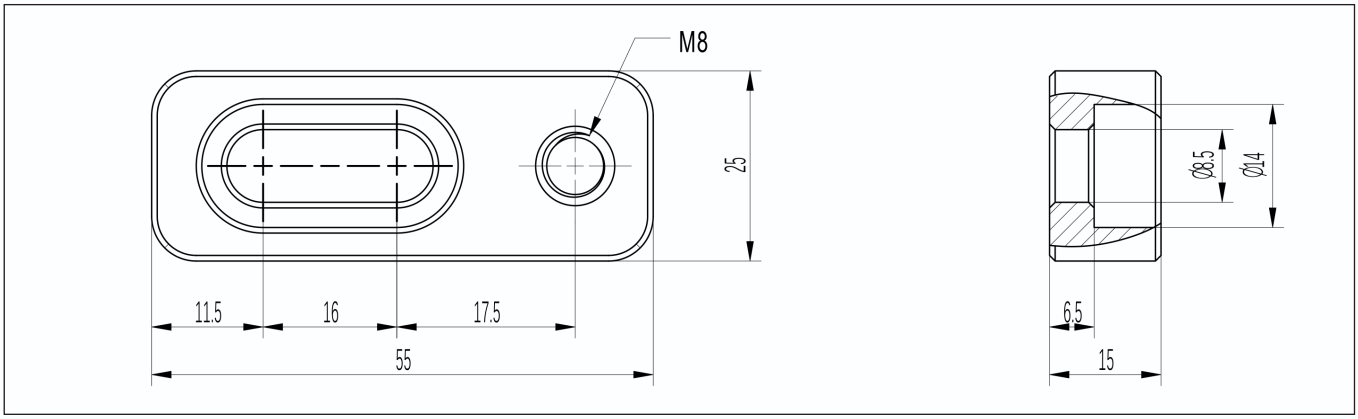

Affordable - KSD - 88

多功能虎钳 | Multi Clamping Vise

齿型固定钳口

可定制生产

材料：
标准：螺钉固定孔 DIN EN ISO 4762
安装：通过槽

Serrated stationary wedge

Customizable production

Material:
Version: Fastening bores for screw DIN EN ISO 4762
Mounting: Via tongue and groove

型号 Description	编号 ID	钳口宽度 A Jaw width A [mm]	钳口高度 B Jaw high B [mm]	重量 Weight [kg]
88G-MT	21650	88	50	1.8

88G-MT 齿型固定钳口 | 88G-MT Serrated stationary wedge

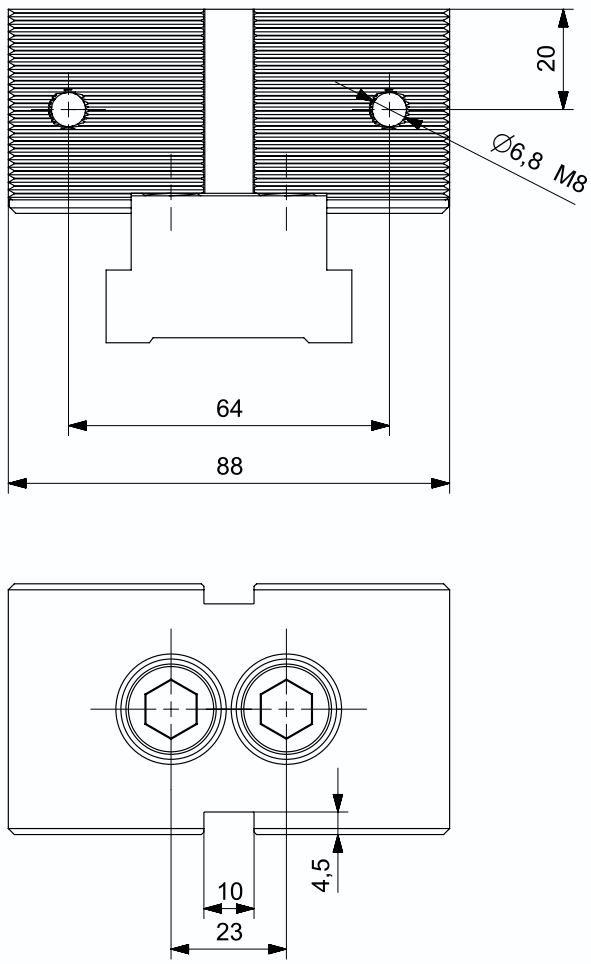

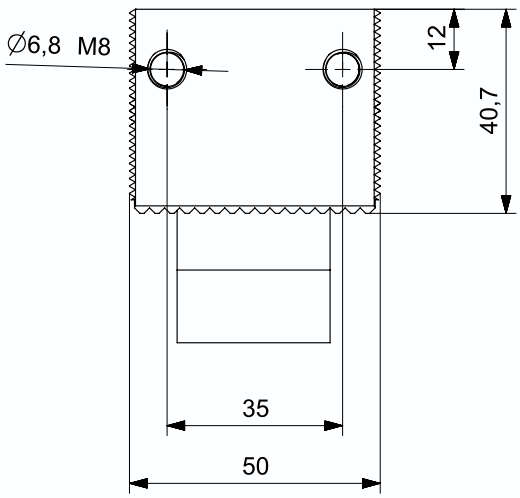

齿型钳口
可定制生产

材料：4140，HRC48-52
标准：螺钉固定孔 DIN EN ISO 4762
安装：通过孔

Serrated Jaw
Customizable production

Material: 4140, HRC48-52
Version: Fastening bores for screw DIN EN ISO 4762
Mounting: Installation through mounting holes

型号 Description	编号 ID	钳口宽度 A Jaw width A [mm]	钳口高度 B Jaw high B [mm]	钳口高度 C Jaw high C [mm]	重量 Weight [kg]
88C-8815	21660	88	15	40	0.6
88C-8820	21662	88	20	42	0.8
88C-10020	21664	100	20	45	1.0

88C 齿型钳口 |88C serrated Jaw

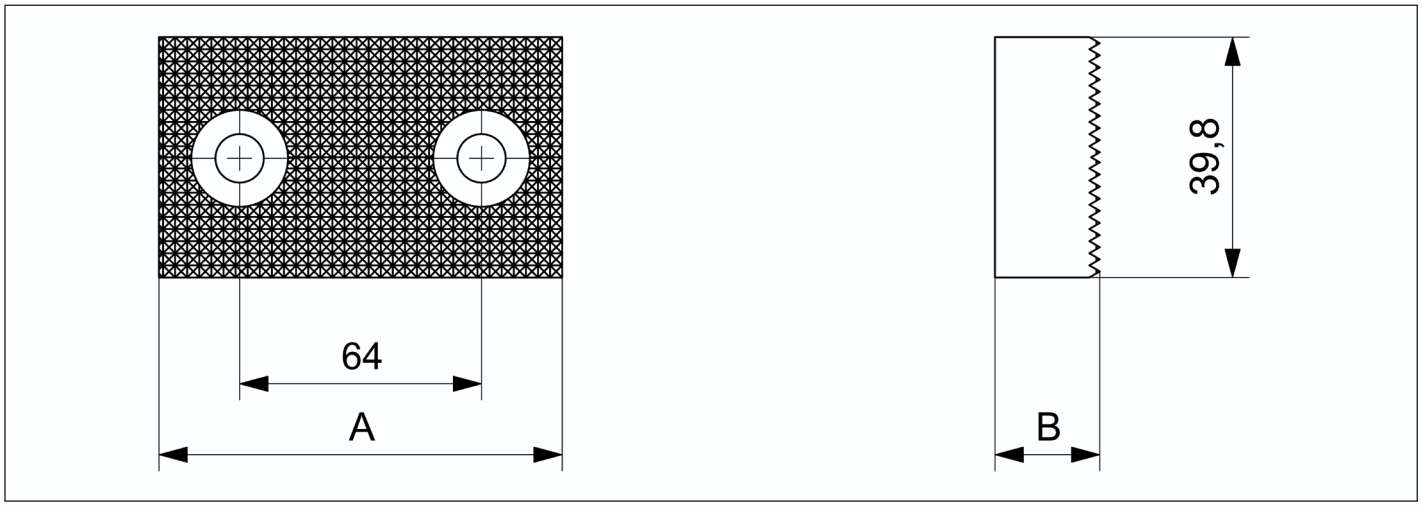

型号 Description	编号 ID	钳口宽度 A Jaw width A [mm]	钳口高度 B Jaw high B [mm]	钳口高度 C Jaw high C [mm]	钳口高度 D Jaw high D [mm]	重量 Weight [kg]
88C-8815T	21661	88	15	40	5	0.6
88C-8820T	21663	88	20	42	5	0.8
88C-10020T	21665	100	20	45	5	1.0

88C-T 齿型台阶钳口 |88C-T serrated step Jaw

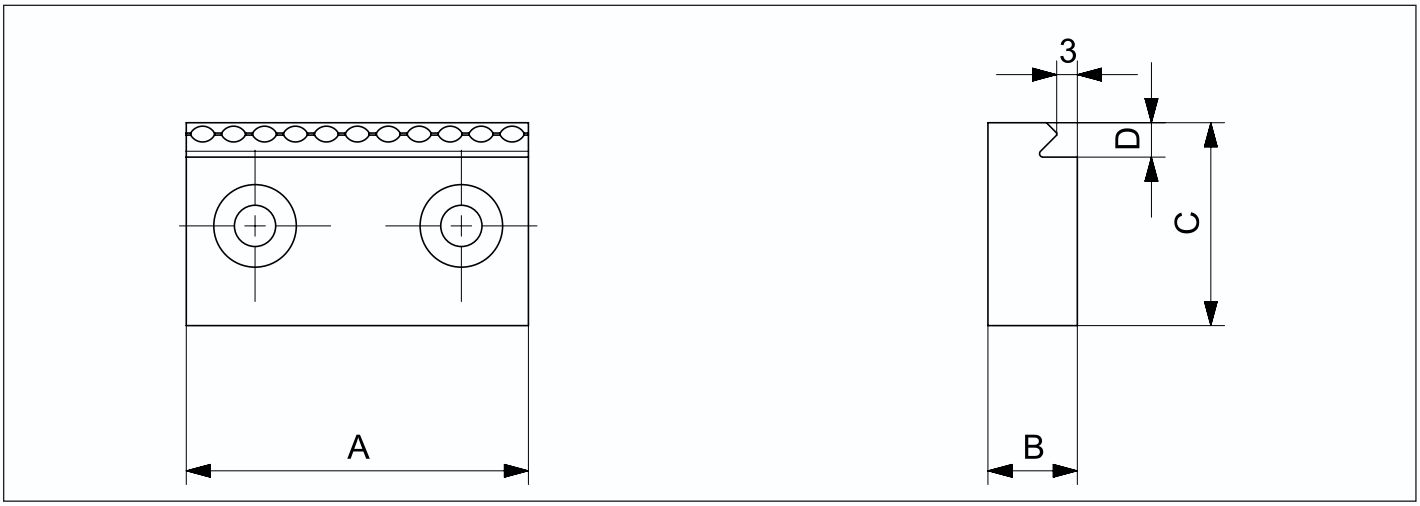

Affordable - KSE

机械夹紧系统 | Mechanical Clamping System

KSE

楔形夹紧元件 KSE
最大限度地利用您的机床工作台！

应用于 SIMPLE-KSZ 系统，将展现出矩阵的美学。

巨大的装夹数量，极少的停机时间和换刀次数。

KSE

Wedge Clamping Element KSE
maximize the use of your machine table!

Applied to the SIMPLE-KSZ system, the aesthetics of the matrix will be revealed.

Huge number of setups with minimal downtime and tool changes.

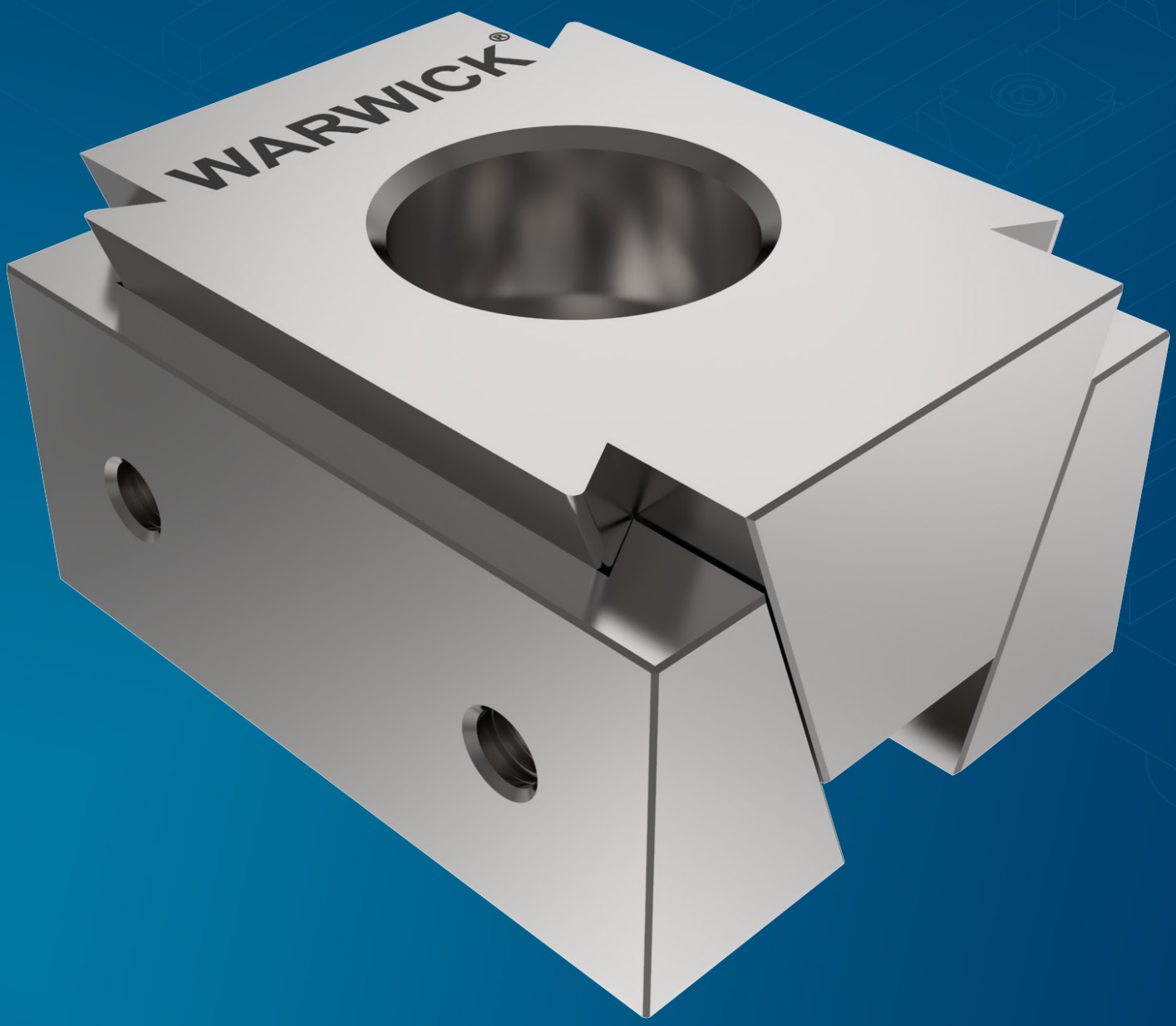

优势 – 您的利益

易于操作

内部反冲弹簧

15 或 30 kN 的高夹紧力

通过锁紧螺钉夹紧在硬化的楔形表面上

使用 WARWICK SIMPLE-TCP 夹紧托盘时灵活

多次夹紧的最佳选择

带有长方形孔，可补偿工件公差

Advantages – Your benefits

Easy handling

Interior recoil spring

High clamping forces of 15 or 30 kN

Clamping over hardened wedge surfaces by means of locking screw

Flexible when using WARWICK SIMPLE-TCP clamping pallets

Optimal for multiple clamping

Incorporated oblong hole for compensating workpiece tolerances

定义夹紧力
夹紧力是在最大压力和最大扭矩下，在卡盘爪上的各个力的算术总和。

Definition clamping force
The clamping force is the arithmetic sum of the various forces on the chuck jaws under the maximum pressure and maximum torque.

技术原理

用内六角螺钉将工件夹紧。 通过向右旋转夹紧螺钉，可将中间夹紧楔块向下移动。 两个夹紧爪向外滑动穿过楔形物并夹紧工件。 松开夹紧螺钉后，中间的夹紧楔块将通过内部反冲弹簧返回到其原始位置。

Technology

Workpieces are clamped with a hexagon socket screw key. The middle clamping wedge is moved down by turning the clamping screw to the right. The two clamping jaws slide through the wedge outwards and clamp the workpiece. When the clamping screw is loosened, the middle clamping wedge is returned to its original position via an interior recoil spring.

1 夹爪
2 夹紧螺丝
3 夹紧楔
4 反冲弹簧

1 Clamping jaw
2 Clamping screw
3 Clamping wedge
4 Recoil spring

楔形夹紧元件 KSE

Wedge Clamping Element KSE

带有光滑的夹紧面，或带有固定软爪和补偿板的螺纹

With smooth clamping surface, or with thread for fixing the upper jaw and compensation plate

型号 Description	编号 ID	Lmin [mm]	Lmax [mm]	H1 [mm]	H2 [mm]	b [mm]	h [mm]	钳口宽度 Jaw width (B)	夹紧力（每个钳口） Clamping force (per jaw)	夹紧螺丝 Clamping screw	钳口面 Jaw
KSE25-6	23101	29	33.4	12	16	12	6	25	11.2 KN /at 18 Nm	M6	Thread（M4）
KSE32-8S	23103	34	38	15	19			32	15.8 KN /at 30 Nm	M8	光面 . smooth
KSE32-8	23105	40	44.5	15	19	16	7.5	32	15.8 KN /at 30 Nm	M8	Thread（M5）
KSE32-8P	23107	40	44.5	15	19			32	15.8 KN /at 30 Nm	M8	光面 . smooth
KSE50-12	23109	39	44.5	22	27	30	11	50	28.6 KN /at 76 Nm	M12	Thread（M5）
KSE50-12P	23111	39	44.5	22	27			50	28.6 KN /at 76 Nm	M12	光面 . smooth

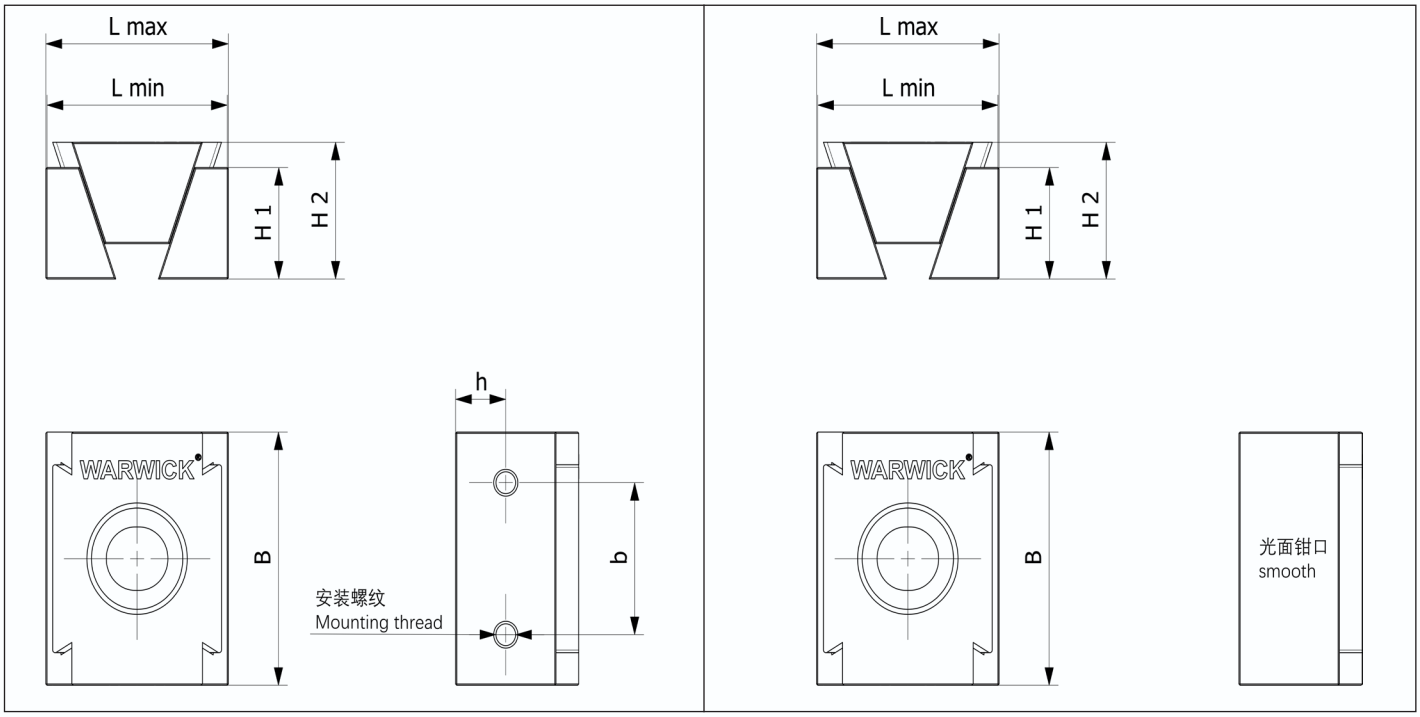

应用领域

四个 KSE，夹紧了八个要加工的工件，安装在 WARWICK SIMPLE-TPC 夹紧托盘上。

Applications

FOUR KSE, CLAMPING EIGHT WORKPIECES TO BE MACHINED, ARE MOUNTED ON A WARWICK SIMPLE-TPC CLAMPING PALLET.

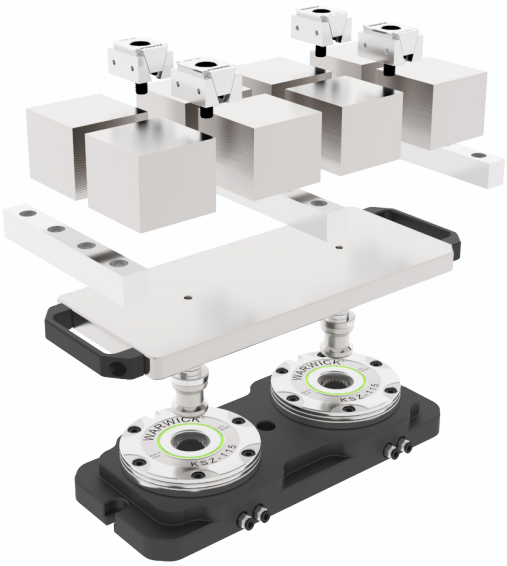

KSH

定心夹紧心轴
最大限度地利用您的机床工作台！

定心夹紧心轴通常用于机械工程。然而，多亏了它们操作简单，组装快速，可用于所有行业。
定心夹紧心轴用于对工件进行定心和夹紧，带定位洞。
定心夹紧心轴具有以下特点：
- 车削 / 铣削过程的精度非常高
- 非常适合车削件的二次加工
- 夹紧体可以很容易地加工（以适应孔径）

KSH

Centering Clamping Mandrels
maximize the use of your machine table!

The centering clamping mandrels are often used in mechanical engineering. However, thanks totheir simple operation and quick assembly, they can be used in all industries.
Centering clamping mandrels are used for centering and clamping of workpieces with a locating hole.
The centering clamping mandrels have the following characteristics:
- Very high accuracy for turning/milling processes
- Ideal for secondary operations on turned parts
- Clamping body can be machined very easily (for adaptation to bore diameter)

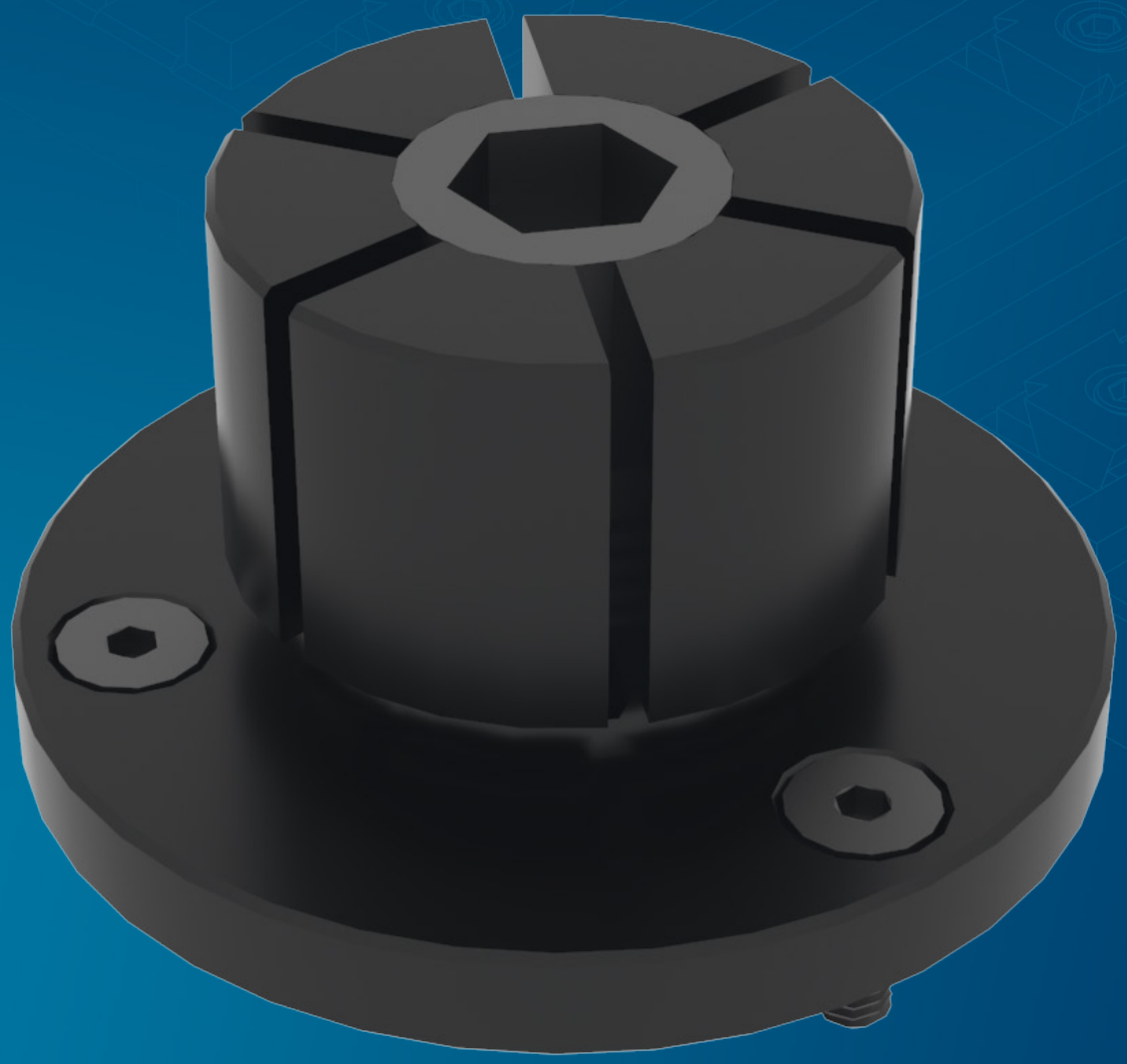

定心夹紧轴

定心夹紧芯轴可以是加工成所需的座直径（例如，通过车削 / 铣削）。
必须注意：加工定心夹紧前心轴，它将膨胀约 0.1 毫米超过夹紧直径。要加工心轴，将提供螺母。
更多信息请参考组装和操作说明。

Centering Clamping Mandrels

The centering clamping mandrel can be machined to the required seating diameter (e.g. by turning/milling). It must be noticed that before machining the centering clamping mandrel, it will be expanded approx. 0.1 mm over the clamping diameter. To machine the mandrel, a nut will be provided.Further or detailed information can be found in the assembly and operating instructions.

型号 Description	编号 ID	Amin [mm]	Amax [mm]	B [mm]	C [mm]	D [mm]	E [mm]	F [mm]	G [mm]	H [mm]	夹紧力 Clamping force	重量 weight [kg]
KSH12-M4	23201	8.0	12.4	30	21.8	15	16	21	M3	M4	3 KN /at 3.5 Nm	0.1
KSH14-M6	23203	12.2	14.2	30	24.9	15	19	23.1	M3	M6	6 KN /at 12 Nm	0.1
KSH20-M8	23205	13.5	20.0	38	24.9	15	19	29	M3	M8	8 KN /at 24 Nm	0.13
KSH27-M10	23207	18.0	27.0	50	28.6	17.5	22.2	39.4	M4	M10	13 KN /at 42 Nm	0.25
KSH35-M12	23209	25.4	35.3	58	31.8	20.6	25.4	45.5	M4	M12	15 KN /at 105 Nm	0.35
KSH51-M16	23211	30.0	51.0	78	39.6	27.0	31.8	63.9	M5	M16	26 KN /at 200 Nm	0.85
KSH77-M16	23213	30.0	77.0	108	45.5	32.3	37.6	92.5	M6	M16	26 KN /at 200 Nm	2.3

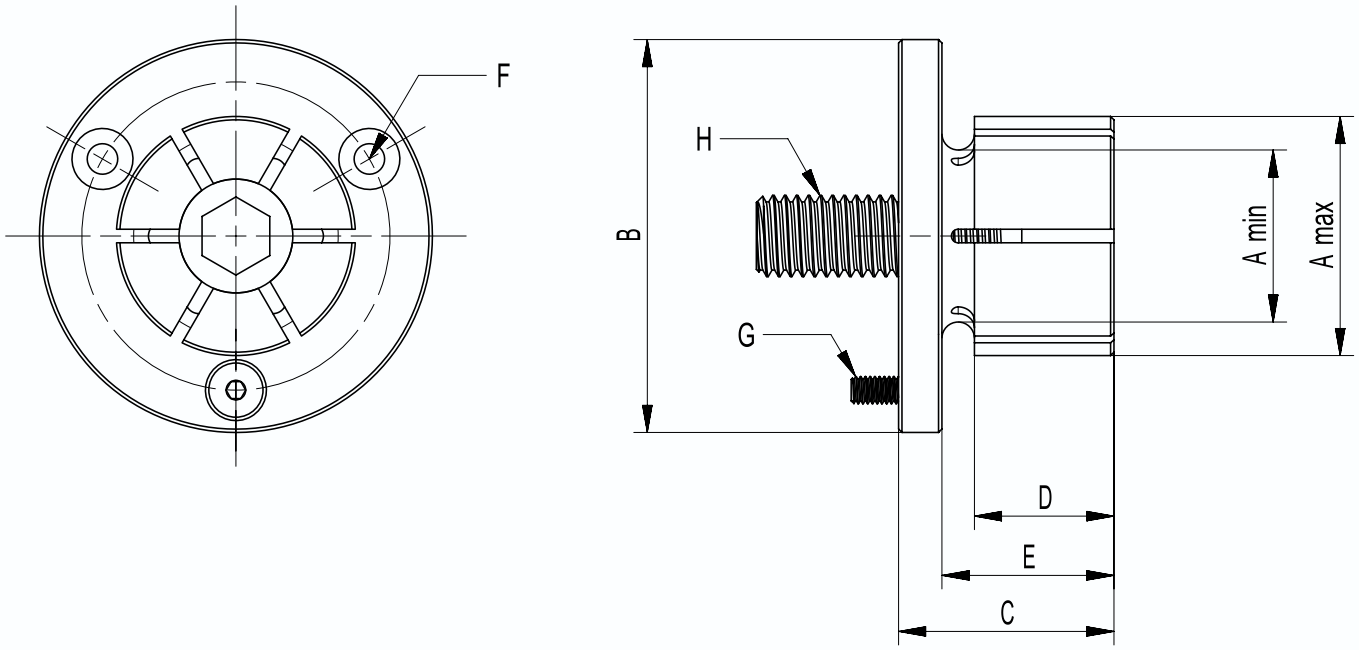

应用领域

十个 KSH，夹紧了十个要加工的工件，安装在 WARWICK SIMPLE-TPC 夹紧托盘上。

Applications

TEN KSH, CLAMPING TEN WORKPIECES TO BE MACHINED, ARE MOUNTED ON A WARWICK SIMPLE-TPC CLAMPING PALLET.